AIRCRAFT ENGINES

Service-Manual for Certifying Staff–Maintenance Organisation

For the aircraft engines

2625 - 02 series

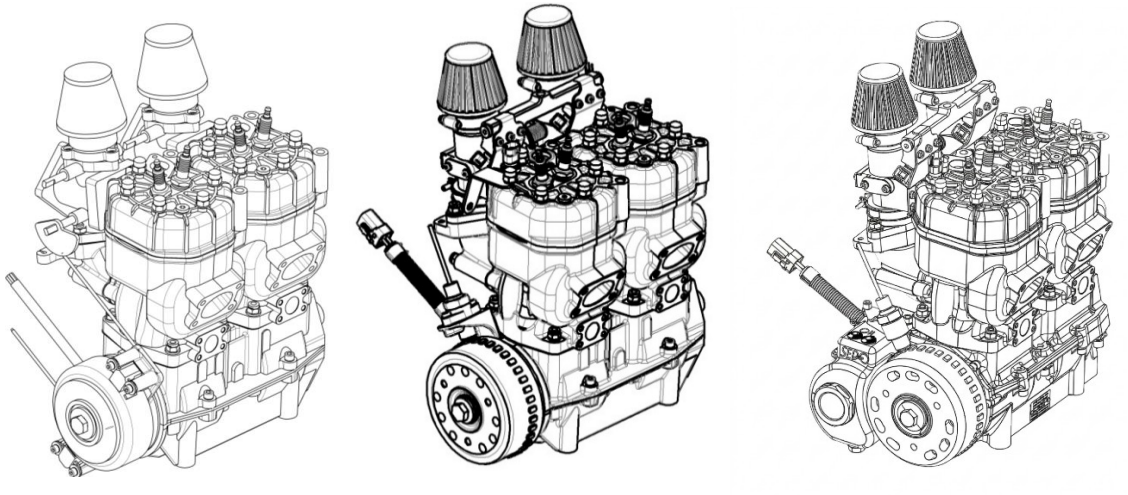

AIRCRAFT ENGINES

Industriestrasse 9
D - 71069 Sindelfingen
Tel.: (0049) 7031-3010
Fax.: (0049) 7031-301231

Edition 2 dated 15.01.2026

0. Document Management

0.1 Record of Revisions

Ausgabe Nr. Release	Datum Date	ersetzt Ausgabe replaces release	Datum Date	Unterschrift Signature
1	05.08.2019	-	-	W. Emmerich
2	15.01.2026	1	05.08.2019	M. Maul

This document is part of the design data approved by EASA under Major Change Approval No. 10091250 and is listed in the approved Master Document List (MDL).

APPROVAL REFERENCE

EASA Major Change No.: **10091250**

MDL Reference: SOLO 2625 – Master Document List, issue 13.02.2026

0.2 Table of Contents

0. Document Management 2
0.1 Record of Revisions 2
0.2 Table of Contents 3
0.3 List of Figures 7
0.4 List of Abbreviations 8
General 9
0.5 Purpose and Scope 9
0.6 Support contact information 9
0.7 Personnel Qualification and Authorisation 9
0.8 Disclaimer 10
0.8.1 Procedures and limits 10
0.8.2 Modification 10
0.8.3 Parts and accessories 10
0.8.4 Warranty limitations 10
0.9 Warnings, Cautions, and Notes 11
1. Description 12
1.1 Engine variants 13
1.2 Technical data 14
1.3 Operational Data and Limitations 15
1.4 Fuels, Oils and Coolants 16
2. SOLO 2625 Engine crank case variants 18
2.1 Standard 2625 engine 18
2.2 2625 Sedo Variant 18
3. Fuel metering and ingnition control variants 20
3.1 Carburettor equipped variants 20
3.1.1 Fuel supply System 20
3.1.2 Carburettor Fuel-Metering System 20
3.1.3 Ignition control - Carburetted Engines 21
3.2 Standard fuel injection variants 22
3.2.1 Fuel supply system 22
3.2.2 Standard fuel injection metering systems 24
3.2.3 Independent Backup System 24
3.2.4 Ignition control - Standard fuel injection systems 24
3.3 NEO- Fuel Injection and ECU Ignition control System 26

3.3.1 Fuel supply system 26
3.3.2 NEO- Fuel Injection System 26
3.3.3 Ignition control – NEO fuel injection system 27
3.3.4 NEO System Operating Logic 27
3.3.5 Redundancy functions–NEO Fuel injection system 28
4. Parts and components 30
4.1 Engine control unit (ECU) 30
4.2 Throttle valves 31
4.3 Air Filters 31
4.4 Injectors 31
4.5 Throttle position sensor 32
4.6 Air temperature sensor 32
4.7 RPM Sensor 32
4.8 Altenator Rotor 32
4.9 Altenator Stator 33
4.10 Voltage Regulator 33
4.11 Magento ignition system 33
4.12 ECU controlled ignition system 34
4.13 ECU NEO controlled ignition system 34
4.14 Water temperature sensor 35
5. Engine Installation Instructions 36
5.1 Engine 36
5.2 Exhaust System 36
5.3 Engine fuel-air mixing setting 37
5.3.1 Carburator settings 37
5.3.2 Fuel injection settings (mapping) 37
5.4 Fuel supply system 39
5.5 Engine monitor and control systems 39
6. General maintenance guidelines 41
6.1 Special tools 41
6.2 Measuring tools 41
6.3 Fastener Installation and Torque 42
7. Scheduled Engine Maintenance Procedures 44
7.1 Daily Pre-Flight Check 44
7.2 25 Hours or Annually inspection (whichever occurs first) 45

7.3 50 Hours or 5 years inspection (whichever occurs first)–for SEDO Modification 47
7.4 100 Hours or 5 years inspection (whichever occurs first) 48
7.5 400 Hours or 20 Years inspection (whichever occurs first).....49
8. Inspection of the Engine components.....50
8.1 Mixture verification test 50
8.1.1 Spark Plug comparison pictures.....51
8.2 Cylinder head inspection.....52
8.3 Cylinder inspection.....52
8.3.1 Typical Cylinder Damages and Causes.....53
8.4 Piston inspection.....55
8.4.1 Piston-Ring Inspection 56
8.4.2 Typical Piston Damage and Causes.....56
8.5 Wrist pin inspection.....58
8.6 Alternator Rotor inspection.....59
8.7 Alternator Stator inspection.....59
8.8 RPM Sensor inspection.....60
8.9 Fuel Fuel pump inspection 60
9. Maintenance Procedures.....62
9.1 SEDO engine variant maintenance 62
9.1.1 SEDO Gearbox – Oil replacement 62
9.1.2 SEDO Gearbox Oil – Inspection and Replenishment 64
9.1.3 SEDO Gearbox – circlip replacement procedure.....65
9.1.4 Rear cover removal.....68
9.1.5 SEDO Gearbox – Fit / Replacement of sight glass.....69
9.2 Carburettor adjustment procedure 70
9.2.1 MIKUNI BN 38 Carburator.....71
9.2.2 MIKUNI BN 38-34-55 Carburator 72
9.2.3 Adjustment of the mixture of SOLO 2625 with dual carburettors 73
9.3 Throttle Body Removal.....74
9.4 Cylinder Head Removal 77
9.5 Removal of Cylinder.....78
9.6 Remove of Piston, Piston Bolt and Bearing.....79
9.7 Installation of Piston, Piston Bolt and Bearing 80
9.8 Installation of Cylinder.....81
9.9 Installation of Cylinder heads 82

9.10 Throttle Body Installation....83
9.11 Air filter cleaning....86
9.12 Removal of alternator rotor....87
9.13 Removal of alternator stator....88
9.14 Installation of alternator rotor....89
9.15 Installation of alternator stator....90
9.16 RPM sensor....91
9.17 Throttle Position sensor....91
9.18 Air Sensor....93
9.19 Water Sensor....94
10. Troubleshooting and Corrective Actions....95
10.1 Engine not starting – Fuel injection system....95
10.2 Engine Running Hot / Suspected Lean Operation....96
10.3 Exceeding maximum temperature limits....97
10.4 High Coolant Temperature....98
10.5 Engine does not achieve full power or power drops....99
10.6 Wire failures....99
10.7 Altenator / charge regulator defect....100
10.8 ECU Engine Status Check....101
10.8.1 Sensor Values....101
10.8.2 Injection Values....102
10.9 ECU Fault Memory – Reading and Diagnosis....103
10.10 Sensors errors....104
10.11 Injection system....106
11. Engine Preservation and Storage....107
12. Ordering of parts....107
12.1 Core Engine Assembly....108
12.2 Maintenance Consumables....109
APPENDIX 1 – Wiring diagrams....110
APPENDIX 2 - List of service bulletins / TM....112
APPENDIX 3: RESERVED....116

0.3 List of Figures

Figure 1 - Sedo engine 19
Figure 2 Fuel system schematic 23
Figure 3 - too lean mixture 51
Figure 4 - correct mixture 51
Figure 5: Good port Figure 6: Bad port 53
Figure 7: Damaged Port 53
Figure 8 Damage of the inlet area 54
Figure 9: position for piston diameter check 55
Figure 10: Seized piston 56
Figure 11: seized piston 57
Figure 12: seized piston 57
Figure 13 Wrist pin inspection 58
Figure 14 Stator failures 59
Figure 15 Fuel pump 60
Figure 16 – Debris at filter in pump 61
Figure 17 - Oil filling ports and sump plug 62
Figure 18: Oil level markings 64
Figure 19 - Balancing shaft with securing circlip 65
Figure 20 - balancing shaft spline with circlip grove 65
Figure 21 - Drill jig positioning 66
Figure 22 - Replacement of circlip with end cap and bolt 67
Figure 23 – Rear Cover 68
Figure 24 – Sight Glass 69
Figure 25: Simplified diagram BN38 70
Figure 25 - BN38 carburettor 71
Figure 26 - BN 38-34-55 72
Figure 27: Remove throttle body–NEW throttle body version 74
Figure 28: Remove old throttle body 75
Figure 29: Remove carburettor version 76
Figure 30: Remove head screws 77
Figure 31: Remove Cylinder 78
Figure 32: removal of piston 79
Figure 33: removal of piston 80
Figure 34 Cylinder installation 81
Figure 35 - cylinder heads 82
Figure 27: Remove throttle body–NEW throttle body version 83
Figure 28: Remove old throttle body 84
Figure 29: Remove carburettor version 85
Figure 36: Removal rotor 87
Figure 37: Removal of the stator 88
Figure 38: Removal of the stator 90
Figure 39 Speed sensor on SEDU version 91

Figure 40 Clearance between RPM sensor and Rotor....91
Figure 41 - Trijeckt ECU data....92
Figure 42 - Throttle positions sensor (TPS)....92
Figure 43: Resistance of the air sensor....93
Figure 44: Resistance of the water sensor....94

0.4 List of Abbreviations

Abbreviation	Name
ALI	Airworthiness Limitation Items
AMSL	Above Mean Sea Level
BTDC	Before Top Dead Centre
CHT	Cylinder Head Temperature
daN	Decanewtons
EASA	European Aviation Safety Agency
ECU	Engine Control Unit
EGT	Exhaust Gas Temperature
FPEU	Fuel pumps electronic unit
HP	Horsepower
IAS	Indicated Airspeed
ISA	International Standard Atmosphere
kW	Kilowatt
LED	Light-Emitting Diode
Li-ion	Lithium-ion
LiPo	Lithium Polymer
LL	Low Lead
MAUW	Maximum All Up Weight
MCP	Maximum Continuous Power
MP	Maximum Power
OAT	Outside Air Temperature
PSI	Pounce per square inch
RPM	Revolutions per Minute
SB	Service Bulletin
SL	Self-launch System
STC	Supplemental Type Certificate
TAS	True Airspeed
TPS	Throttle position sensor
WOT	Wide Open Throttle

General

0.5 Purpose and Scope

The purpose of this Service Manual is to provide aircraft manufacturers and maintenance organisations with the technical information and requirements necessary for the installation and maintenance of SOLO aircraft engines.

It defines the applicable engine interfaces, installation requirements, operating and installation limitations, and maintenance requirements. The information is applicable to installations in both uncertified and certified aircraft.

Aircraft-specific information, including requirements relating to the aircraft, aircraft/engine installation, flight operation, and aircraft-level maintenance and safety, shall be obtained from the documentation provided by the aircraft manufacturer and/or its authorised dealer.

This Service Manual shall be used in conjunction with the available Spare Parts List.

0.6 Support contact information

For additional information concerning the engine, its maintenance, or spare parts, contact the Type Certificate Holder:

AIRCRAFT ENGINES GmbH
Industriestrasse 9
D - 71069 Sindelfingen
Germany

Tel.: (0049) 7031-301 173

0.7 Personnel Qualification and Authorisation

Maintenance and repair of SOLO aircraft engines require appropriate knowledge and experience with two-stroke engines and a valid training supplied by SOLO Aircraft Engines GmbH.

For installation in certified aircraft, maintenance and release to service of this engine shall be performed by appropriately qualified and authorised certifying personnel in accordance with the applicable aviation regulations.

0.8 Disclaimer

0.8.1 Procedures and limits

The procedures and limits in this Manual constitute the manufacturers official recommendation for engine maintenance and operation. Instruction The guidelines given in the Maintenance Manual are useful and necessary supplements to training. They, however, cannot substitute competent theoretical and practical personal instruction.

0.8.2 Modification

Non-authorized modifications as well as the use of components and auxiliary components not corresponding to the installation instructions exclude any liability of the engine manufacturer.

0.8.3 Parts and accessories

SOLO Aircraft Engines GmbH emphasises that parts and accessories not supplied as genuine SOLO parts have not been verified by SOLO for suitability, compatibility or compliance with the engine design and are therefore **not authorised for use**.

The installation or use of non-genuine parts or accessories may alter the design characteristics, performance, reliability or safety of the engine and may adversely affect its operation.

SOLO Aircraft Engines GmbH accepts **no liability for damage, malfunction or consequential effects resulting from the installation or use of non-genuine parts or accessories**. Only genuine SOLO parts and accessories, or parts specifically approved by SOLO Aircraft Engines GmbH, shall be used for maintenance and repair of the engine.

0.8.4 Warranty limitations

The engine must be operated exclusively with the specified fuels, oils, and other operating fluids in accordance with the manufacturer's instructions.

If an inspection reveals that foreign objects, particles, or substances have entered the engine from an external source and caused damage, any warranty claim relating to such damage shall be excluded.

In general, an operation up to 12,5h per year is assumed.

The maximum lifetime is reduced in case of belt tentsion higher than 2500N, the maximum allowable limit is at 5000N but will reduce the lifetime due to extensive internal wear.

0.9 Warnings, Cautions, and Notes

The following definitions apply to Warnings, Cautions, and Notes used in this Flight Manual Supplement.

WARNING
Identifies an instruction which, if not followed, may cause serious injury or even fatal injury.

CAUTION
Identifies an instruction which, if not followed, may cause minor or moderate injury.

NOTICE
Identifies an instruction which, if not followed, may severely damage the engine or could void any warranty.

ENVIROMENTAL NOTE
Identifies instructions intended to prevent or minimise environmental contamination or improper disposal of fuels, oils, chemicals, cleaning agents, or other materials used.

1. Description

The SOLO 2625 series comprises two-cylinder, inline, two-stroke engines produced by SOLO Aircraft Engines, formerly SOLO Vertriebs- und Entwicklungs GmbH. The engine series is available in different configurations, including carburetted versions with a single or dual carburettor and electronically fuel-injected versions. All variants of the engines are equipped with liquid cooling, fuel-oil mixture lubrication and dual electronic high-voltage ignition.

The standard engine consists of two opposed pistons operating on a single balanced crankshaft. The SEDO variant incorporates an additional single-shaft balancing system installed within the engine block to provide additional engine balancing.

The crankshaft is configured for power transmission by means of a belt drive. Electrical power is generated by an integrated three-phase generator.

They are designed as an engine to support sailplanes to be able to perform self-launches and approved iaw. CS-22 amdt. 2.

A short hint, depending upon the maintenance of the accessory systems and the experience of the supporting staff, it may be useful, to send the engine to perform the 50h inspection.

1.1 Engine variants

The SOLO 2625 engine variants are defined according to the following characteristics:

- Engine Crank case design
- Fuel metering and ignition control system

The standard engine may be equipped with the SEDO balancing system. When the SEDO balancing system is installed, the suffix **"S"** is added to the engine variant designation.

The standard engine may be equipped with one of the following fuel metering units:

1. **2625-02** dual carburettor with electronic ignition (Magneto with fixed ignition timing, no ECU)
2. **2625-02i** Electronic fuel injection with ECU-controlled ignition (ECU mapped ignition timing with electronic fuel injection)
3. **2625-02i NEO** NEO electronic fuel injection with ECU-controlled ignition (Redundant ECU/control architecture with mapped ignition and redundant injection control)
4. **2625-02 SEDO** Engine as described between 1 – 3 equipped with balancing shaft system

The following variants of the SOLO 2625 series are available:

Variant	Type designation	Carburetor		Standard Injection	NEO-Fuel injection	SEDO System
		Single	Dual			
2625–02	2625–02	X				
2625–02 Sedo	2625–02 s	X				X
2625–02 i	2625–02 i			X		
2625–02 I Sedo	2625–02 is			X		X
2625–02 i neo	2625–02 in				X	
2625–02 I neo Sedo	2625–02 ns				X	X
2625–02	2625–02		X			
2625–02 Sedo	2625–02 s		X			X
2625–02 i	2625–02 i			X		
2625–02 I Sedo	2625–02 is			X		X
2625–02 i neo	2625–02 in				X	
2625–02 I neo Sedo	2625–02 ns				X	X

1.2 Technical data

System technical data – standard engine	
Engine	SOLO 2625 series
Displacement	625 ccm bore 76 mm stroke 69 mm
Compression ratio	9.5 : 1
Ignition system	**2625–02:** Dual magnetic high-voltage ignition **2625–02 i / 2625–02 in:** Dual electronic ECU controlled high-voltage ignition
Spark plugs	NGK B7HS electrode gap size 0,7mm for injection variant electrode gap size 0,4 – 0,5mm for carburettor variant
Fuel metering	2625–02 : dual Carburetor 2625–02 i: Electronic, x throttle-valves, ECU mapped and controlled 2625–02 n: Electronic, x throttle-valves, ECU mapped and controlled
Sense of rotation	Clockwise in-flight direction
Fuel type	AVGAS 100LL mixed with 2- stroke oil, or Unleaded 95 octane (RON) mixed with 2- stroke oil ASPEN, MOTORMIX
Oil type	2-stroke JASO FC or FD, e.g. Castrol ACT>evo, Castrol Racing 2T Recommended: SOLO two stroke oil
Lubrication	Fuel oil mixture: Sea level - 1:50 (2%) 1000m AMSL - 1:45 2000m AMSL - 1:40 3000m AMSL - 1:35
Weight without exhaust	SOLO 2625 series: ~23 kg
Alternator	12 V 500 W
Coolant	Ethylene glycol-based engine coolant concentrate, free of nitrites, amines and phosphates (NAP-free), meeting **ASTM D3306**, **ASTM D4985**, **SAE J1034**, or equivalent, e,g, ANF40, or (BASF G48) Mixing Ratio **40:60 (Coolant : distilled water)**
Maximum Belt Load (static load) at crank shaft	2500 N (254,8kg; 561,9 lbs) without life time reduction 5000 N (509,7kg, 1123,9 lbs) with reduced life time
Air filter	K&N Airfilter Oil or equivilant
Fuel Pressure	Carburetor : 0,3 – 0.5bar Injector – System: 3,0bar +/- 0,1 bar

Additional System technical data – SEDO variant	
Engine	SOLO 2625 S
SEDU Gearbox Oil type	Liqui Moly 75W-90 GL5
SEDU Gearbox Oil quantity (max)	180 ml
Weight without exhaust	SOLO 2625 series Sedu: ~27 kg

1.3 Operational Data and Limitations

System technical data	
Maximum power (Takeoff power)	50 kW* (67 hp) at a rotational speed of 6 250 rpm
Maximum continuous power	50 kW* (67 hp) at 6 250 rpm
Maximum engine RPM	6 600 RPM
Maximum rotational speed	6 700 rpm (limited by the ECU for 2625–0x)
Maximum exhaust gas temperatures	650°C
Idle rotational speed	approx. 2 300 rpm
Max. coolant temp.	115 °C (240°F) measured in the cylinder head
Min. coolant temp for max power.	40 °C (104°F) measured in the cylinder head
Fuel consumption	approx. 24,5 l/h at max. continuous power

*corrected to ICAO atmosphere the value can vary between +/- 4%, 50kW injection version, 47kW carburetor version

1.4 Fuels, Oils and Coolants

The following table specifies the approved fuels, lubricants, gear oils and coolants for the SOLO 2625-series engines, including the applicable quality standards, mixing ratios and maximum storage or service intervals.

Only products meeting the specified requirements shall be used. Where a maximum storage period or replacement interval is specified, the shorter applicable period shall apply:

Liquids	Norm	Mixture	Replacement Interval
MoGas max. E5	DIN EN 228	min 1:50	3 Months
AVGAS	ASTM D910, ASTM D910	min 1:50	6 Months
ASPEN, MOTORMIX	DIN 51641	Premixed	12 Months
Two Stroke Oil	JASO FC or FD	N/A	1 Year
Gear Oil SAE 75-90	API GL 5 / API GL 4++	N/A	10 h / 1 Year
Water Glysantin BASF G48. G64 Volkswagen Code: G12++	ASTM D3306, ASTM D4985, SAE J1034	60:40 (50:50)	5 Year
Water Glysantin BASF G40 Volkswagen Code: G12++	ASTM D3306, ASTM D4985, SAE J1034	60:40 (50:50)	5 Year
Kuttenkeuler GmbH ANF40	ASTM D3306, ASTM D4985, SAE J1034	60:40 (50:50)	5 Year

Tabel 1: List of liquids

WARNING
A fuel mixture of MOGAS and Two Stoke Oil may separate after 3 months, to ensure a proper engine operation and avoid engine damage, the fuel need to be drained completely from the aircraft and replaced with new supplied with a new supplied fuel mixture.

WARNING
A fuel mixture of AVGAS and Two Stoke Oil may separate after 6 months, to ensure a proper engine operation and avoid engine damage, the fuel need to be drained completely from the aircraft and replaced with new supplied with a new supplied fuel mixture.

WARNING
INJECTION SYSTEMS ONLY If fuel is contaminated with particle greater 10µm these particles are introduced into to the fuel pumps or injectors, the pumps or injectors may fail and lead to engine failure.

WARNING
The usage of other mixtures than supplied in section 2.3 may lead to engine damage or engine failure.

CAUTION
The required fuel-oil mixture ratio is dependent on the expected operating altitude. As altitude increases, the fuel metering system reduces the quantity of fuel delivered to the engine. The fuel-oil mixture ratio must therefore be adjusted to maintain the required quantity of lubricating oil. The following fuel-oil mixture ratios shall be used as a minimum: • **Sea level:** 1:50 • **1000 m:** 1:45 • **2000 m:** 1:40 • **3000 m:** 1:35 The pilot shall determine the required fuel-oil mixture before flight based on the maximum planned operating altitude and ensure that the fuel in the tank is prepared accordingly. A higher oil concentration than specified above does not adversely affect the engine or exhaust system under normal operating conditions. The specified minimum oil concentration shall, however, not be exceeded in the direction of reduced oil content.

2. SOLO 2625 Engine crank case variants

The standard SOLO 2625 engine uses two opposed pistons operating on a common crankshaft. The crankshaft incorporates an integrated balancing arrangement to counteract the primary reciprocating forces generated during engine operation.

The SEDO variant incorporates an additional mechanical balancing system to further reduce residual engine vibration and dynamic loads transmitted from the engine to the aircraft structure. The SEDO system consists of a single balancing shaft installed in the lower section of the engine and mechanically driven from the crankshaft through a dedicated gear train.

2.1 Standard 2625 engine

The SOLO 2625 series is a two-cylinder, inline, two-stroke aircraft engine with a liquid-cooled cylinder and cylinder-head assembly. The engine has a displacement of 625 cm³, with a bore of 76 mm and a stroke of 69 mm.

The engine consists of a crankcase, crankshaft, two cylinders, two pistons with piston rings, cylinder heads, crankshaft bearings, connecting rods and the associated engine covers and seals.

The two pistons operate on a common crankshaft. The crankshaft incorporates counterweights for primary engine balancing and is supported by bearings installed within the crankcase. Power is transmitted from the crankshaft through the drive-side output arrangement, typically using a belt drive.

The cylinders and cylinder heads incorporate coolant passages through which liquid coolant is circulated to remove heat generated during engine operation. The cooling system is external to the engine and includes the applicable coolant connections and temperature-sensing provisions.

Engine lubrication is provided by a fuel-oil mixture. No separate oil lubrication system is required for the main engine components.

A generator assembly is installed at the rear of the engine. The generator rotor is mechanically connected to the crankshaft and rotates within the stator assembly to generate electrical power. The rotor also incorporates the features required for crankshaft-speed and position sensing on applicable engine configurations.

2.2 2625 Sedo Variant

The 2625-series engine uses two opposed pistons operating on a single crankshaft. Although the opposed-piston configuration provides inherent balancing of certain reciprocating forces, residual dynamic forces and vibration are generated during engine operation. These forces can be transmitted to the engine mounting structure and aircraft, resulting in increased vibration and mechanical loads.

The SEDO variant uses the same basic 2625 engine hardware but incorporates an additional mechanical balancing system to reduce these residual dynamic forces and the resulting vibration and loads transmitted to the engine mounting structure.

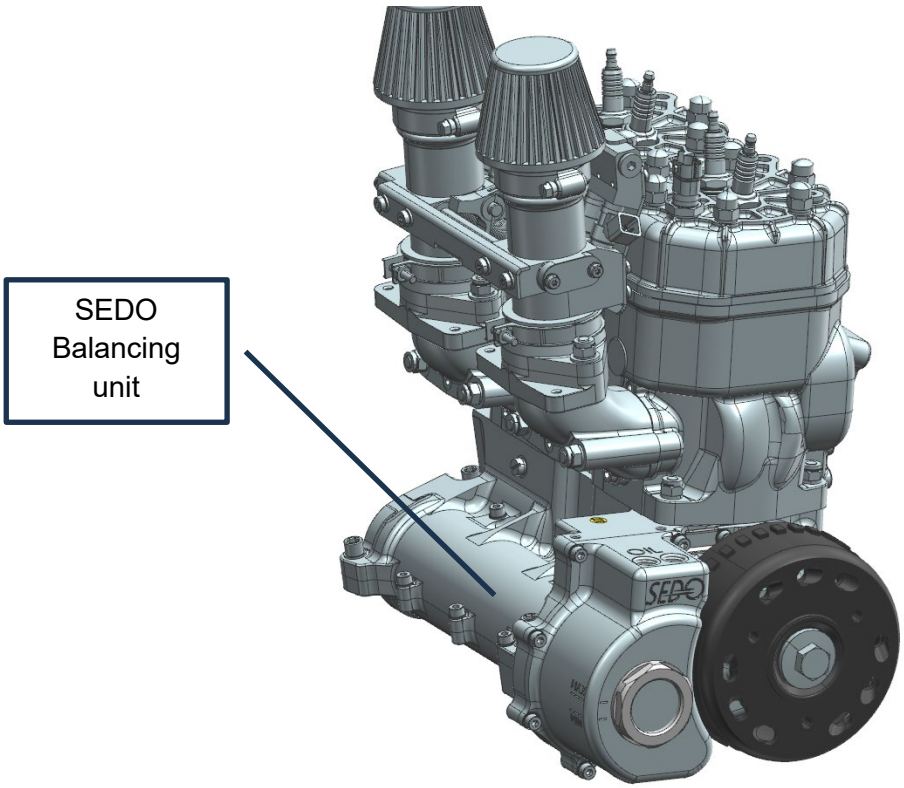

Figure 1 - Sedo engine

The SEDO balancing system consists of a single balancing shaft installed in the lower section of the engine, below the induction system. The balancing shaft is mechanically driven by the crankshaft through a dedicated gear train. The crankshaft and balancing-shaft gears are directly engaged and maintain a defined phase relationship during engine operation, causing the balancing shaft to generate counteracting dynamic forces.

The balancing system is installed in the rear section of the engine, behind the generator. The balancing shaft, gears and associated bearings are lubricated by a dedicated gear-oil system. This lubrication system is separate from the fuel-oil mixture used for lubrication of the two-stroke engine.

The SEDO system does not alter the basic two-cylinder, two-stroke engine architecture. It is an additional mechanical balancing system designed specifically to reduce residual engine vibration and dynamic loads.

The SEDO system is installed by SOLO Aircraft Engines on applicable 2625-series engine configurations and is identified by the suffix “**S**” in the engine designation.

3. Fuel metering and ingnition control variants

The SOLO 2625-series engines are available with different fuel-metering and ignition-control configurations. The applicable configuration is identified by the engine variant designation.

1. **2625-02** – dual carburettor with electronic ignition
2. **2625-02i** – Electronic fuel injection with ECU-controlled ignition
3. **2625-02i NEO** – NEO electronic fuel injection, redundant ECU-controlled ignition

3.1 Carburettor equipped variants

Applicable variants: 2625–02, 2625–02S

The carburetted 2625-series engines use a diaphragm carburettor system for fuel metering and supply to the engine intake system.

3.1.1 Fuel supply System

Fuel is supplied to the carburettor(s) by a mechanical fuel pump driven by crankcase pressure pulses. The 2625–02 is equipped with two carburettors. The carburettor nozzle sizes are matched to the respective engine configuration and number of carburettors.

3.1.2 Carburettor Fuel-Metering System

Applicable variants: 2625–02, 2625–02 s,

The carburetted 2625-series engines use mechanically controlled diaphragm carburettors for fuel metering. The carburettor meters fuel according to the airflow through the intake system and the pressure differential generated within the carburettor. The carburettors do not incorporate an integrated fuel pump; fuel is supplied by the aircraft fuel system.

The **2625–02** is equipped with one diaphragm carburettor supplying all cylinder.

The applicable carburettors are the **Mikuni BN 38** and **Mikuni BN 38-34-55** diaphragm carburettors. Refer to Section 7.3.1 for the mixture setting procedures.

To comply with the requirements of **CS 22.955(b)**, the fuel supply system shall be capable of supplying a minimum fuel flow of **31,25 l/h at a fuel pressure of max. 0.5 bar** under take-off conditions.

3.1.3 Ignition control - Carbureted Engines

The carbureted 2625-series engines are equipped with a breaker less dual magneto ignition system. The ignition system operates independently of the aircraft electrical system and does not require an Engine Control Unit (ECU).

The ignition system consists of two independent ignition circuits. Each circuit generates and controls the ignition for the engine through its associated ignition coil and spark plugs. The independent circuits provide ignition redundancy in the event of a failure of one ignition circuit.

Depending on the engine variant and serial number, the engine may be equipped with either an Iskra or Ducati magneto ignition system.

The Iskra ignition system uses an adjustable stator to establish the ignition timing. The specified ignition timing is before top dead centre (BTDC). The timing is established by the angular position of the stator relative to the crankcase and shall be verified using a stroboscopic timing light.

The Ducati ignition system uses external magnetic pickups to determine the ignition point. The ignition timing is fixed e.g. at 22° BTDC and is established by the physical position of the pickups relative to the magnetic rotor. The timing can be verified using the timing marks provided on the pickups and rotor and by means of a stroboscopic timing light.

The ignition timing is not electronically mapped or varied according to engine operating parameters. Correct ignition timing is determined by the mechanical position of the applicable ignition components.

3.2 Standard fuel injection variants

3.2.1 Fuel supply system

Applicable variants: 2625–02 i, 2625–02is

2625–02 in, 2625–02ns

The fuel supply system provides fuel to the engine fuel-injection system. The aircraft fuel system consists of the fuel tank, fuel lines, fuel shut-off valve, fuel pumps with associated check valves, fuel filters, pressure regulator and throttle-body/injector assembly, as applicable to the aircraft installation.

The fuel supply system shall be capable of supplying a minimum fuel flow of **25 l/h at a fuel pressure of 3 bar +/-0.1 bar** under normal engine operating conditions.

To comply with the requirements of **CS 22.955(b)**, the fuel supply system shall be capable of supplying a minimum fuel flow of **31.25 l/h at a fuel pressure of 3 bar** (a pressure of less than 2.85 must be avoided, in general a pressure of 3.1bar during engine operation should be designed) - under take-off conditions. To less fuel pressure leads to too lean engine operation and as a result engine damage may occur.

The fuel pressure shall be measured at the fuel distributor of the throttle-body/injection system. The fuel supply system shall maintain the specified pressure and flow under all applicable engine operating conditions.

3.2.1.1 Fuel line diagram for ignition-based engines – SOLO BVE

The aircraft manufacturer may install alternative fuel pumps provided that they meet the requirements specified in Section 4.2.1. The selection, installation and operation of alternative fuel pumps are the responsibility of the aircraft manufacturer.

The fuel supplied to the fuel pumps shall be filtered to **10 µm or finer**. This filtration may be provided by either a tank inlet filter or an inline filter installed in the fuel line between the fuel tank and the fuel pumps.

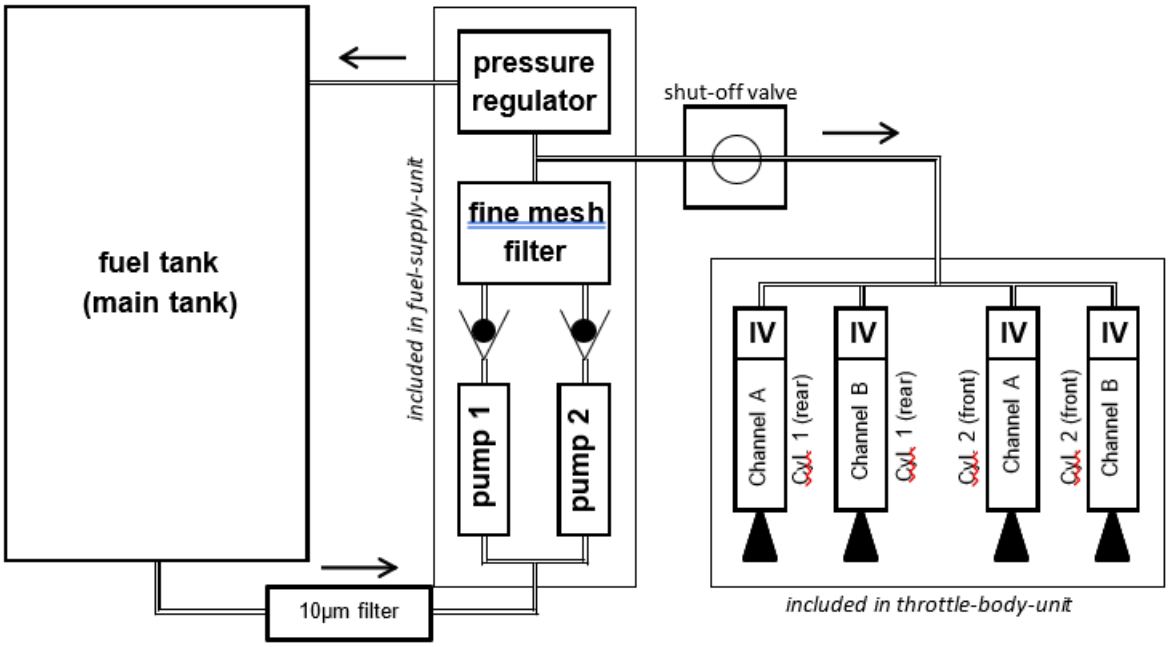

Figure 2 Fuel system schematic

3.2.2 Standard fuel injection metering systems

Applicable variants: 2625–02 i, 2625–02is

All 2625 – series engines equipped with electronic fuel injection use the same basic fuel-injection system and injector configuration. The engine control system determines fuel-injection timing, fuel-injection duration and ignition timing based on the following parameters:

- Engine speed (RPM)
- Intake air temperature
- Throttle position
- Ambient pressure (measured inside the ECU)

These parameters are processed by the Electronic Control Unit (ECU), which calculates the required fuel-injection and ignition parameters for each operating condition.

The throttle body and associated intake components control the air and fuel supplied to the cylinders and comprise the following:

- Throttle valves
- Air filters
- Injectors
- Throttle position sensor

Refer to Section 5 for a description of the parts and components.

Refer to Section 6.3.2 for the mixture setting procedures.

3.2.3 Independent Backup System

In the event of an ECU failure, the ECU is overridden by an emergency backup system. The backup system uses an independent RPM sensor signal and a fixed emergency mapping. This mapping does not provide maximum engine performance but provides a safe means of maintaining engine operation and returning the aircraft to the ground.

The backup system independently triggers the ignition coils and the fuel injectors of Bank B. The ignition coils are triggered either by the ECU or by the backup system, with ignition timing determined by the applicable mapping.

3.2.4 Ignition control - Standard fuel injection systems

Applicable variants: 2625–02 i, 2625–02is

The standard fuel-injection variants of the 2625-series engine are equipped with an electronically controlled dual ignition system. Ignition timing is determined by the Engine Control Unit (ECU) based on the crankshaft position and engine operating parameters.

The ECU receives the following inputs relevant to ignition control:

- **Crankshaft speed and position**, determined by the RPM and crankshaft-position sensors; refer to Section 4.6.8
- **Intake air temperature**, measured by the air temperature sensor; refer to Section 2.6.6.
- **Throttle position**, determined by the throttle position sensor; refer to Section 4.6.6.
- **Absolute pressure**, measured by the internal pressure sensor, providing compensation for ambient pressure and altitude.

The ECU processes these input signals using the programmed ignition-control map to determine the required ignition timing for the current engine operating condition. The ignition timing is therefore electronically controlled and varies according to the applicable engine operating parameters.

The ECU generates the trigger signals for the ignition drivers, which control the two independent ignition circuits. The dual ignition system provides ignition redundancy; a failure of one ignition circuit does not result in complete loss of ignition.

The ignition timing is referenced to the instantaneous crankshaft position. Correct operation of the RPM and crankshaft-position sensing system is therefore essential for accurate ignition timing and reliable engine operation.

As the engine approaches the maximum permitted engine speed, the ECU limits engine power by using two separate approaches:

- retard of ignition timing in direction to TDC.
- interrupting the ignition using ignition-limiting

Both approaches start to begin simulations, approximately 200 RPM below the maximum permitted engine speed. Depending on the engine installation and operating conditions, activation of the ignition-limiting function may result in a temporary reduction in engine speed. Engine power is restored when the engine speed decreases below the limiting range.

Engine speed (RPM) must be displayed to the pilot through the aircraft display or control unit. The aircraft manufacturer shall provide an appropriate indication to the pilot when the engine approaches the maximum permitted engine speed and the ignition-limiting function may become active.

The ignition system is controlled by the ECU during engine starting and normal engine operation. The ECU and associated ignition drivers require an electrical power supply in accordance with the applicable aircraft installation. The ECU installation, power supply and location shall be defined by the aircraft manufacturer in the applicable Aircraft Maintenance Manual.

The ignition system status and applicable fault information may be monitored and recorded by the ECU. Fault information can be retrieved using compatible diagnostic equipment through the available ECU communication interfaces.

3.3 NEO- Fuel Injection and ECU Ignition control System

Applicable variants: 2625–02 in, 2625–02ns

3.3.1 Fuel supply system

The fuel supply system requirements for the NEO fuel-injection system are identical to those specified in Section 4.2.1. The fuel supply system shall therefore comply with all applicable requirements and limitations specified in that section.

3.3.2 NEO- Fuel Injection System

The NEO system is an enhanced version of the electronic fuel-injection system used on the 2625 series. It retains the basic fuel-injection and ignition architecture while incorporating additional sensors, actuators and redundant control functions to improve system reliability and fault tolerance.

The NEO system incorporates the following additional or modified components:

Sensors

- Inductive, redundant engine-speed and crankshaft-position sensors located on the generator rotor (redundant sensor unit).
- Redundant throttle-valve angle sensors (redundant sensor unit).
- Two fuel-pump current sensors.
- Ambient-pressure sensor integrated into the BEE ECU.

Actuators and control components

- Four fuel injectors, with two injectors per throttle body. One injector per throttle body is assigned to Channel A and one to Channel B.
- Two fuel pumps, integrated into the fuel supply unit, with associated fuel-pump relays integrated into the fuel-pump electronic unit. Where applicable, the fuel pumps and/or relays may be supplied by the aircraft manufacturer.
- Two dual ignition coils. Each ignition coil provides one ignition output to each cylinder head.
- Two ignition drivers integrated into the ECU.
- engine control unit (ECU) incorporating redundant ignition and fuel-injection control channels.

3.3.3 Ignition control – NEO fuel injection system

The 2625-series NEO engine is equipped with a dual, electronically controlled ignition system. The system consists of two dual ignition coils, two ignition drivers integrated into the Engine Control Unit (ECU), and four spark plugs.

Each cylinder is equipped with two spark plugs. The two ignition circuits operate simultaneously, with each cylinder receiving two ignition events per crankshaft revolution: one occurring near top dead centre (TDC) and one occurring near bottom dead centre (BDC).

The two ignition circuits are independently controlled. Ignition Channel A and ignition Channel B are each supplied by a separate ignition coil and ignition driver. In the event of a complete or partial failure of one ignition circuit, the remaining ignition circuit continues to operate the engine, with a limited reduction in engine performance.

The ignition timing is electronically controlled by the ECU in accordance with the engine-control map. The applicable ignition timing is calculated from the engine operating parameters.

The NEO engine-control system incorporates redundant control channels designated **Channel A** and **Channel B**. The channels are separate from the two ignition circuits. Each channel controls one fuel injector per cylinder, while the ignition system is controlled through the two independent ignition circuits.

As the engine approaches the maximum permitted engine speed, the ECU limits engine power by using two separate approaches:

- retard of ignition timing in direction to TDC.
- interrupting the ignition using ignition-limiting

Both approaches start to begin simulations, approximately 200 RPM below the maximum permitted engine speed. Depending on the engine installation and operating conditions, activation of the ignition-limiting function may result in a temporary reduction in engine speed. Engine power is restored when the engine speed decreases below the limiting range.

Engine speed (RPM) must be displayed to the pilot through the aircraft display or control unit. The aircraft manufacturer shall provide an appropriate indication to the pilot when the engine approaches the maximum permitted engine speed, and the ignition-limiting function may become active.

3.3.4 NEO System Operating Logic

The NEO fuel-injection system consists of four fuel injectors arranged in two redundant fuel-injection channels, designated **Channel A** and **Channel B**. The forward injector at each intake port is assigned to Channel A, while the aft injector at each intake port is assigned to Channel B.

For safety and system monitoring, the ECU automatically changes the active injection channel at regular intervals during engine starting and during full-throttle operation.

During full-throttle operation, the ECU monitors the engine speed during each changeover between Channel A and Channel B. If the engine speed decreases following a channel change, the ECU identifies the channel associated with the lower engine speed as the affected channel and switches to the channel providing the higher engine speed.

Following detection of a channel fault, the ECU remains on the channel providing the higher engine speed until the next engine restart.

The NEO system therefore provides continuous monitoring of the redundant fuel-injection channels during operation without requiring pilot intervention.

3.3.5 Redundancy functions–NEO Fuel injection system

The NEO engine system incorporates redundant systems and components to provide a high degree of operational safety. Almost all electrical components essential for engine operation are provided with redundancy.

The Engine Control Unit (ECU) itself does not contain duplicated electronic hardware. Instead, the NEO system uses a single highly reliable ECU with redundant connections for critical input and output functions. Critical ECU interface signals are duplicated to maintain system functionality in the event of a failure in an individual signal path. This configuration is referred to as the redundant design of the NEO system.

A specific feature of the NEO system is the ability of the ECU to continuously monitor selected components and operating parameters. If a fault or abnormal operating condition is detected, the ECU can automatically initiate the defined corrective action, such as switching to a redundant channel or component.

The applicable monitoring and automatic redundancy functions are described in the following sections:

Component(s)	Automatic monitoring by the ECU	Error detection, ECU reaction and effects of errors
Engine temperature, ambient air temperature and ambient air pressure sensor	While the ECU is turned on	If the signal is outside the acceptance range, a default value is used. The engine is then (restricted) operable. If the engine temperature sensor is defective, the cold start behaviour is bad. If the air pressure or air temperature sensor is faulty, this leads to a loss of performance at higher air temperatures and at higher altitudes.
Fuel pump sensors	Fuel pump warning on the CAN bus	If a current sensor is defective, the affected pump cannot be monitored. It is possible that an error message concerning the pump is displayed incorrectly.
Angle sensor throttle valve	TPS warning on the CAN bus	If the signal of one potentiometer (channel) is outside the acceptance range, only the other is used. In this case the engine can be operated normally.

		If both signals are within the rejection range, or if they differ too much, a default value of 90° is used. The engine can then only be operated at full throttle.
RPM-sensor and crankshaft position sensor	RPM sensor warning on the CAN bus	If the signal of a sensor is faulty, the synchronisation of the affected channel is restarted. If only the currently active (primary) channel is affected, the system switches over to the other one. Normally this has no effect to the engine performance. Only if both RPM-sensors fail, the motor cannot be operated anymore.
Injection valves	During full throttle operation	Both in full throttle operation and during starting, the ECU changes the active injection channel at regular intervals. At full throttle the engine speed is monitored. If this speed drops, the ECU switches permanently to the channel with higher speed until the next restart.
Component(s)	**Automatic monitoring by the ECU**	**Error detection, ECU reaction and effects of errors**
Fuel pumps	While the fuel pumps are on (for about 3 seconds after switching on the ECU & while the engine is rotating)	Both fuel pumps are operated in parallel and monitored by their power consumption. The engine is supplied with sufficient fuel even if only one of the two fuel pumps is working properly.

Tabel 2: Description of NEO System

The ECU sends a message via CAN for every detected fault (see engine manual and CAN protocol). If the engine rotates, an additional message is stored in the internal error memory.

4. Parts and components

4.1 Engine control unit (ECU)

Applicable variants: 2625–02 i, 2625–02 is, 2625–02 in, 2625–02 ns

The Engine Control Unit (ECU) is the central control unit of the electronically controlled engine system. It continuously processes the engine operating parameters and uses the programmed engine-control maps to determine the required fuel-injection and ignition parameters.

The ECU receives input from the following sensors:

- Intake air temperature; refer to Section 5.6.
- Crankshaft speed and position, determined from the RPM and position sensors; refer to Section 5.7.
- Throttle position, determined from the throttle position sensor; refer to Section 5.5.
- Absolute pressure, measured by the internal pressure sensor, for compensation of ambient pressure and altitude.

Based on these inputs, the ECU continuously adjusts the fuel-injection quantity, injection duration and ignition timing according to the current engine operating condition. The fuel-injection quantity is corrected according to the current air density to maintain the required engine performance over the applicable operating range.

The ECU controls the fuel injectors through the redundant fuel-injection channels. Under normal operation, the ECU operates the designated active channel and automatically switches between Channel A and Channel B in accordance with the NEO system operating logic. Engine speed is monitored during channel changes to detect a reduction in engine performance and identify a potentially faulty channel.

The ECU also controls the ignition system. Based on the crankshaft position and the programmed ignition map, the ECU determines the required ignition timing and generates the corresponding trigger signals for the ignition drivers and ignition coils.

As the engine approaches the maximum permitted engine speed, the ECU limits engine power by interrupting the ignition to prevent over speeding.

The ECU is supplied with electrical power according to the aircraft installation. The aircraft manufacturer is responsible for defining the ECU power supply, installation and location. The actual installation shall be specified in the applicable Aircraft Maintenance Manual.

The ECU provides the required electrical supply and control signals to the applicable engine sensors and actuators.

During engine start, the fuel pumps are activated for approximately three seconds after the engine system is switched on to establish fuel pressure. The ECU also applies an enriched fuel mixture during cold starting. No separate choke or other cold-start device is therefore required. The engine is started with the throttle in the idle position.

The ECU records engine operating parameters and system data during operation. Depending on the ECU configuration, the internal memory can store recorded data for approximately two hours.

The ECU incorporates an integrated fault memory that stores faults detected by the engine-control system. The stored information may also include exceedances of defined operating limits, such as engine speed or coolant temperature.

Stored operating data and fault information can be retrieved through the available communication interfaces using compatible diagnostic equipment. The ECU provides RS-232 and CAN communication interfaces. Engine operating data and fault information can be transmitted via the CAN interface, for example, to an aircraft engine display or control unit. The applicable CAN communication protocol is available from SOLO upon request.

4.2 Throttle valves

Applicable variants: 2625–02 i, 2625–02 is, 2625–02 in, 2625–02 ns

The SOLO 2625 series is equipped with two throttle valves that regulate the airflow to the cylinders.

The dual throttle valves are mechanically synchronized by a common shaft, ensuring simultaneous movement of both valves.

A centrally located throttle cable attachment is provided on the shaft between the two intake passages. This arrangement allows the throttle valves to be operated simultaneously by a single throttle control cable.

4.3 Air Filters

Applicable variants: 2625–02, 2625–02s, 2625–02 i, 2625–02 is, 2625–02 in, 2625–02 ns

The intake system of the 2625–02 uses two air filter to supply air to the engine.

The moisture of the surrounding air is filtered by permanent filter elements (cotton based) which are directly mounted to the top of the throttle body and must be lubricated prior usage.

Refer to Section 10.10 for the cleaning process.

4.4 Injectors

Applicable variants: 2625–02 i, 2625–02 is, 2625–02 in, 2625–02 ns

Two fuel injectors are installed downstream of the throttle valves and inject fuel into the intake air of the two-stroke engine. The injectors are controlled by the Engine Control Unit (ECU).

4.5 Throttle position sensor

Applicable variants: 2625–02 i, 2625–02 is, 2625–02 in, 2625–02 ns

The throttle valve position is monitored by either a resistive throttle position sensor or a contactless magnetic position sensor, depending on the engine configuration.

The Engine Control Unit (ECU) determines the throttle valve position from the electrical signal provided by the sensor. For the resistive sensor, the position is determined by measuring the voltage at the throttle position sensor input of the ECU.

4.6 Air temperature sensor

Applicable variants: 2625–02 i, 2625–02 is, 2625–02 in, 2625–02 ns

The ECU uses an air temperature sensor to determine the temperature of the intake air. The sensor is installed in or near the throttle body and provides the ECU with the current intake air temperature for engine control.

For testing and maintenance, refer to Section 10.17.

4.7 RPM Sensor

Applicable variants: 2625–02 i, 2625–02 is, 2625–02 in, 2625–02 ns

The crankshaft speed and position are determined by an inductive RPM sensor that detects the passage of the gaps on the generator rotor.

For the fuel injection version, the sensor provides the ECU with the information required to determine the instantaneous crankshaft speed and angular position.

This sensor uses a single channel detection, for the 2625-0x i series, the gap is fixed adjusted.

The 2625-0x i neo is designed differently using a redundant sensor elements RPM for sensing crankshaft speed and position information. In the event of a sensor failure, the redundancy function of the sensor will take over and prevent a sensor failure.

4.8 Altenator Rotor

Applicable variants: 2625–02, 2625–02s, 2625–02 i, 2625–02 is, 2625–02 in, 2625–02 ns

The rotor is located at the rear of the engine and is mechanically connected to the crankshaft. It performs two primary functions:

- Crankshaft position sensing: The rotor incorporates a series of notches or reference features that are detected by the RPM and position sensors. These signals allow the ECU to determine the crankshaft rotational speed and angular position.
- Generator operation: The rotor incorporates permanent magnets that generate a rotating magnetic field. As the rotor rotates with the crankshaft, this magnetic field passes

through the stator windings and induces an electrical voltage, thereby generating electrical power.

4.9 Altenator Stator

Applicable variants: 2625–02, 2625–02s, 2625–02 i, 2625–02 is, 2625–02 in, 2625–02 ns

The stator is located at the rear of the engine and forms the stationary part of the integrated three-phase generator. It consists of a set of stationary electrical coils positioned around the rotor.

As the generator rotor rotates with the engine, its magnetic field passes the stator coils and induces an alternating electrical voltage in the windings. The generated electrical power is supplied to the aircraft electrical system through the applicable generator control and rectification system.

The generator output is dependent on engine speed and the electrical load connected to the system. The stator therefore provides the primary source of electrical power generated by the engine during operation.

4.10 Voltage Regulator

Applicable variants: 2625–02, 2625–02s, 2625–02 i, 2625–02 is, 2625–02 in, 2625–02 ns

The engine system may be supplied, upon request, with a voltage regulator. The regulator converts and regulates the electrical output generated by the integrated three-phase generator to the voltage required by the aircraft electrical system.

The regulated electrical power can be used to supply the aircraft electrical loads and, where applicable, recharge the aircraft battery system. The voltage regulator and its installation shall be specified in accordance with the requirements of the aircraft manufacturer.

4.11 Magento ignition system

Applicable variants: 2625–02, 2625–02 s

The engine is equipped with a dual electronic magneto ignition system consisting of two independent ignition circuits. Each ignition circuit includes an ignition pickup, an ignition coil and the associated spark plugs.

The ignition system generates the electrical energy required for ignition independently of the aircraft electrical system. As the engine rotates, the magnetic rotor generates electrical energy in the ignition system, and the ignition pickups detect the crankshaft position.

The ignition pickups provide the timing reference for triggering the ignition coils. When the crankshaft reaches the defined ignition position, the corresponding ignition circuit generates a high-voltage pulse at the ignition coil. The ignition coil increases the voltage to the level required to produce a spark across the spark-plug electrodes.

The two ignition circuits operate independently, providing ignition redundancy. A failure of one ignition circuit does not prevent the remaining circuit from operating the engine.

For the Ducati ignition system, the ignition timing is fixed position before top dead centre (BTDC). The ignition timing is determined by the physical position of the external ignition pickups relative to the magnetic rotor and is not adjustable during normal operation. The correct ignition timing can be verified using a stroboscopic timing light.

4.12 ECU controlled ignition system

Applicable variants: 2625–02 i, 2625–02 is

The 2625–02i engines are equipped with an electronically controlled, map-based ignition system. The ignition system is integrated into the Engine Control Unit (ECU) and operates independently of the fuel-injection control function.

The ECU receives the crankshaft speed signal from the RPM sensor and uses this information together with the throttle position, engine coolant temperature, intake-air temperature and ambient pressure to determine the applicable engine operating condition.

Ignition timing maps are stored within the ECU. Based on the current engine operating condition, the ECU determines the required ignition timing and generates the corresponding trigger signals for the integrated ignition modules.

The ignition modules control two independent dual ignition coils. Each dual ignition coil supplies one spark plug in each cylinder, providing two spark plugs per cylinder and two independent ignition circuits.

Both ignition circuits operate during normal engine operation. In the event of a failure of one ignition circuit, the remaining ignition circuit continues to operate the engine with a limited reduction in engine performance.

The ignition timing is therefore electronically determined by the ECU according to the programmed ignition map and is not established by a fixed mechanical ignition position.

The ECU also incorporates an overspeed protection function. When the engine speed exceeds the applicable maximum operating range, the ECU interrupts the ignition to limit engine speed and prevent engine overspeed.

Refer to Section 4.2.3 for details of the emergency backup system.

4.13 ECU NEO controlled ignition system

Applicable variants: 2625–02 in, 2625–02 ns

The engine variant with a NEO fuel injection system is equipped with a dual, electronically controlled ignition system. The system consists of two independent ignition circuits, two dual ignition coils, two ignition drivers integrated into the Engine Control Unit (ECU), and four spark plugs.

The ECU receives crankshaft speed and position information from the redundant RPM and crankshaft-position sensors. The ECU uses this information, together with the applicable engine operating parameters, to determine the required ignition timing.

The ignition timing is calculated from the engine-control map. Depending on the engine operating condition, the ECU determines the appropriate ignition timing and generates the corresponding trigger signals for the ignition drivers.

The ignition drivers control the two ignition coils. Each dual ignition coil supplies one spark plug in each cylinder, resulting in two spark plugs per cylinder and two independent ignition circuits.

The ECU-controlled ignition system therefore provides electronic control of ignition timing over the engine operating range, while maintaining redundancy through the two independent ignition circuits (NEO variant).

Refer to Section 4.3.3 for details of the redundant system and automatic changeover from Channel A to Channel B in the event of a suspected failure.

4.14 Water temperature sensor

Applicable variants: 2625–02, 2625–02s, 2625–02 i, 2625–02 is, 2625–02 in, 2625–02 ns

The coolant temperature is measured by a temperature sensor installed in the cylinder head. The sensor provides the engine control or monitoring system with the coolant temperature for monitoring and, where applicable, engine control and protection functions.

For testing and maintenance, refer to Section 10.19.

5. Engine Installation Instructions

5.1 Engine

The engine can be installed into a suitable airframe using the four bottom screws and the four screws around crank shaft. The following requirements shall be complied with when installing the engine:

- The cylinders shall be oriented approximately vertically, with the cylinder heads positioned uppermost when the engine is in its normal operating position.
- The engine may be mounted using the four M8 threaded holes at the drive-side flange and four M10 threaded holes are provided at the bottom of the crankcase.
- The load applied to each engine mounting thread shall not exceed **5 kN**.
- Where the propeller is driven by a belt, the static belt tension shall not exceed **5000 N (2500 N if a lifetime reduction is not acceptable)**.
- Fuel pressure as per section 3.2
- There is no modification to the exhaust systems, which has not been approved by Solo
- The cooling system shall be equipped with a water cooler having a minimum cooling capacity of **16 kW**.
- Where an electric starter is installed, the starter motor shall have a minimum power rating of **400 W**.
- The electrical installation shall be in accordance with the applicable wiring diagrams provided in APPENDIX 1.
- Where the **SOLO GR 30 regulator** is installed in accordance with the applicable wiring diagram in APPENDIX 1 – Wiring diagrams, the power supply to the engine components is redundant. In this configuration, failure of the aircraft battery does not result in loss of engine operation.
- The ECU transmits fault and error information via the CAN interface.

5.2 Exhaust System

The exhaust system is selected and supplied by the aircraft manufacturer. The design and configuration of the exhaust system can have a significant effect on engine performance, particularly on a two-stroke engine, where exhaust-system characteristics influence gas exchange, cylinder scavenging and exhaust-gas temperature.

Any exhaust system installed on a SOLO engine shall therefore be verified by SOLO for the applicable engine configuration and installation to ensure the engine operational limitations will not be exceeded when installed in the airframe. Refer to Section 6.3 for detail.

Changes to the exhaust system may affect the required fuel-to-air mixture. The carburettor settings or fuel injection mapping shall therefore be established and released by SOLO for the applicable exhaust configuration.

For engines equipped with electronic fuel injection, changes to the exhaust system may affect the required fuel-injection mapping. The applicable fuel-injection map shall therefore be established and approved by SOLO for the specific exhaust configuration and engine installation.

Notice
SOLO may supply standard exhaust systems or develop application-specific exhaust systems in cooperation with the aircraft manufacturer.

CAUTION
Any repair, modification or welding of a SOLO-supplied exhaust system shall be performed only in accordance with an approved repair procedure or with prior written approval from SOLO. Repairs or modifications that may alter the geometry, dimensions, material or structural integrity of the exhaust system shall not be performed without approval from SOLO.

5.3 Engine fuel-air mixing setting

5.3.1 Carburator settings

The **2625–02** is equipped with two diaphragm carburettors, with each carburettor supplying its associated cylinder.

The applicable carburettors are the **Mikuni BN 38** and **Mikuni BN 38-34-55** diaphragm carburettors.

Refer to Section 10.2 for details on the Carburettor adjustment procedure.

5.3.2 Fuel injection settings (mapping)

The fuel-injection system is controlled by the Engine Control Unit (ECU). The ECU determines the required fuel quantity and injection duration from the programmed engine-control map and the measured engine operating parameters, including engine speed, throttle position, intake air temperature and ambient pressure.

The applicable ECU map was established by SOLO Aircraft Engines GmbH for the specific engine configuration. The fuel-injection calibration is dependent on the engine and aircraft installation. Changes to the exhaust system, intake system, fuel system, propeller or other installation parameters may affect engine operation and require verification of the fuel-injection calibration.

The airframe manufacturer shall verify the engine installation and fuel-injection performance following any installation change that may affect engine operation.

NOTICE
SOLO Aircraft Engines GmbH will provide technical support when requested to assist in determining whether the applicable engine mapping is suitable for the installation.

5.3.2.1 Mapping change procedure

A Service Bulletin Modification or replacement of the ECU fuel-injection map shall only be performed by personnel authorised by SOLO Aircraft Engines GmbH using the applicable /Win diagnostic and programming equipment.

A request for a map change or map verification may be submitted by the airframe manufacturer. SOLO shall require the following information:

- Engine type and serial number.
- ECU identification.
- ECU software and mapping version.
- Engine and aircraft configuration.
- Exhaust and intake configuration.
- Fuel type and specification.
- Applicable engine operating limits.
- Relevant modifications to the engine or aircraft installation.

SOLO shall retain the original map to permit restoration of the previous configuration if required.

Following successful dyno testing of a new or modified map, SOLO will request the airframe manufacturer to verify the map by flight testing over the applicable operating range. The following engine parameters shall be monitored:

- Engine speed.
- Throttle position.
- Intake air temperature.
- Ambient pressure.
- Fuel pressure.
- Exhaust-gas temperature (EGT).

The measured parameters shall be evaluated against the applicable SOLO operating limits and target values. If required, SOLO shall make further adjustments to the fuel-injection map and repeat the required testing.

If applicable, SOLO Aircraft Engines GmbH shall issue a **Service Bulletin** introducing a new approved ECU mapping version. The mapping shall be updated in accordance with the instructions and applicability specified in the Service Bulletin.

5.4 Fuel supply system

SOLO recommends the use of the optional **Fuel Supply Unit (BVE)** for the engine fuel supply system. The BVE incorporates two fuel pumps, associated check valves, a pressure regulator and a fine-mesh fuel filter.

When installing the BVE, the following requirements and recommendations shall be observed:

- The BVE shall be installed below the main fuel tank, with the fuel pumps installed horizontally and at the lowest practical position.
- The fuel line from the main tank to the BVE shall be as short as practicable and shall rise continuously towards the fuel tank to minimise the risk of air entering the fuel supply.
- The fuel system shall be protected against contamination. SOLO recommends installing a **10 µm tank inlet filter** to prevent contamination from entering the main fuel tank.
- The pressure loss in the fuel line between the BVE and the engine, including the fuel valve and fittings, shall not exceed **50 mbar at a fuel flow rate of 30 l/h**.

If fuel pumps other than those incorporated in the SOLO BVE are used, their suitability shall be confirmed by SOLO before installation. In particular, the following requirements shall be met:

- During engine operation, the fuel pressure at the fuel distributor of the throttle-valve unit shall remain between **2.85 bar and 3.1 bar**.
- The fuel injectors shall be protected by a **10 µm fine-mesh fuel filter**.
- If the current consumption of an individual fuel pump exceeds pumps' rating, an increased-capacity smoothing capacitor may be required. Refer to the applicable power-supply wiring requirements in APPENDIX 1 – Wiring diagrams.

All fuel lines shall be suitable for aircraft fuel systems and shall provide the required level of fire resistance for the installation. SOLO recommends **Gore/Goodrich 811** fuel hose, size **Dash-04**, for the engine fuel installation.

5.5 Engine monitor and control systems

The SOLO engine ECU does not provide a direct pilot interface for displaying engine operating parameters or for controlling aircraft-specific functions. The engine monitoring, pilot indication and aircraft-level control functions are the responsibility of the airframe manufacturer.

For installations equipped with a retractable pylon, control and monitoring of the pylon system are also the responsibility of the airframe manufacturer and shall be implemented independently of the engine ECU.

The airframe manufacturer may use the **SOLO CAN communication protocol** to retrieve operating data and fault information from the ECU and display the applicable engine parameters to the pilot.

NOTICE
The CAN protocol may be requested from SOLO Aircraft Engines GmbH for aircraft installation purposes.

WARNING
Only tested equipment is allowed to be connected to the ECU complying with the requirements of the ECU. If non – compatible equipment is installed, engine malfunction can occur and result in damage to the airframe, casualty or endanger the life of the crew onboard or ground.

The airframe engine control and monitoring system shall provide the following interfaces and operating conditions to ensure safe integration with the engine system:

#	System	Requirement
1	ECU power supply	The airframe electrical system shall provide two independent 12 V DC power supply lines to the SOLO ECU: • Nominal supply voltage: **12 V DC**, with a minimum available voltage of **11 V DC**. • Each supply line shall be capable of continuously supplying a minimum of **5 A**. The engine electrical system may be supplied with electrical power from either the aircraft battery or the integrated engine generator. To reduce electrical interference (EMI) and suppress voltage transients and spikes within the electrical system, a smoothing capacitor shall be installed in accordance with the applicable wiring diagram.
2	Ignition-coil power supply	Two independent 12 V DC power supply lines shall be provided for the ignition coils. Each supply line shall be individually protected by a **5 A fuse**.
3	Engine starting	The aircraft shall be equipped with a suitable starter motor and Bendix-type starter engagement system capable of rotating the engine at the required starting speed.
4	Fuel supply	The fuel system shall provide fuel to the engine fuel-injection system at a nominal pressure of **3 bar** and at the required fuel flow specified in Section 4.2.1.
5	Cooling system	For water-cooled engine installations, the aircraft cooling system shall provide sufficient coolant flow and heat-rejection capacity

		to maintain the engine coolant temperature below **115 °C** under all applicable operating conditions.
6	Fuel shut-off	The aircraft shall provide a means for the pilot to manually shut off the fuel supply to the engine

Tabel 3: Interface requirements for SOLO 2625 engine system

The airframe manufacturer is responsible for the design, installation, monitoring, protection and certification of the aircraft-level systems interfacing with the SOLO engine. All interfaces shall be verified as part of the aircraft installation and shall comply with the applicable engine installation requirements and aircraft certification basis.

NOTICE
SOLO Aircraft Engines may be contacted to review and evaluate the proposed pilot interface system. Where requested by the airframe manufacturer, SOLO may provide a non-technical objection to the proposed interface, subject to review of the applicable system design and interfaces.

6. General maintenance guidelines

6.1 Special tools

Use only the special tools recommended by SOLO for engine maintenance, disassembly and assembly.

In addition to standard workshop tools and equipment, the following special tools, test equipment and materials are required to perform maintenance, repair and testing in accordance with the applicable procedures:

Step	SOLO order No.	Description
1	00 80 594 00 10 140 00 80 588	**Puller for drive side** Cylinder screw M 12 x 50 Pressure piece
2	00 80 530 00 10 140 3 pcs. 00 10 150	**Puller for generator bell** Cylinder screw M 12 x 50 Cylinder screw M 8 x 40
3	00 80 314	**Pressure tester**
4	N/A	SEDU balancing shaft drill jig

Tabel 4: List of tools

6.2 Measuring tools

The following measuring tools are required for engine maintenance and inspection:

Tool	Application	Tolerance
Vernier or digital calliper	General inspection tool where high precision is not required	±0.02 mm

Steel rule	Basic dimensional checks where high accuracy is not required	+/- 0.5 mm
Dial gauge indicator	Precision inspection tool for detecting small deviations or movement, e.g. radial movement/run-out of shafts and component	±0.02 mm
Bow Micrometre	Accurate measurement of external dimensions, e.g. crankshaft journal diameters or piston dimensions	+/- 0.002 mm
Inside micrometre	Accurate measurement of internal dimensions, e.g. internal diameters of bores or bearing housing dimensions	+/- 0.01 mm
Inside precision measuring gauge	Accurate measurement of internal bores, particularly where **roundness, taper or variation along the bore** needs to be assessed.	±0.02 mm
Feeler gauge	Measure small gaps and clearances e.g. piston ring end gap or component and assembly clearances.	±0.01 mm
Spring scale (500 N)	Measure relatively low mechanical forces during inspection and adjustment	±1%
Thermometer	Measure temperatures	-20 °C – 1000 °C

Tabel 5: Measuring tools

All tools must be calibrated to their corresponding standards and procedures.

6.3 Fastener Installation and Torque

To ensure correct assembly and prevent improper tightening, all screws, bolts and nuts shall be installed and tightened in accordance with the following procedure:

1. Manually install the fastener and engage the threads fully by hand.
2. Tighten the fastener to the specified torque value using a calibrated torque wrench.
3. Where specified, apply the applicable locking or securing method after tightening.

Tighten fasteners to the torque specified in the exploded view(s) and/or in the written procedure.

Part	Torque Value	Tolerance
Spark Plug	20 Nm	+/- 10%
Drive pully on crankshaft	100 Nm	+/- 10%
Bolts and nuts M6	12 Nm	+/- 10%
Bolts and nuts M8	20 Nm	+/- 10%
Bolts and nuts M10	40 Nm	+/- 10%
Magneto on crankshaft / Rotor	80 Nm	+/- 10%
SEDO oil filling caps	12 Nm	+/- 10%
SEDO oil drain plug	12 Nm	+/- 10%
SEDO sight glass	24 Nm	+/- 10%

Tabel 6: List of torque values

CAUTION
Professional calibration of the torque wrench is essential to ensure the accuracy and repeatability of the specified tightening torques. The torque wrench shall be calibrated at regular intervals in accordance with the approved procedures of the maintenance organisation.

WARNING
Non-compliance can result in serious injuries, casualty or endanger the life of the crew onboard or ground. Exactly observe the tightening torques for screws and nuts. Overtightening or a connection which is too loose could cause serious engine damage.

7. Scheduled Engine Maintenance Procedures

7.1 Daily Pre-Flight Check

The daily pre-flight inspection is the responsibility of the airframe manufacturer. The following engine checks are recommended for inclusion in the applicable aircraft pre-flight inspection procedure:

1. SEDO variant: Verify the gearbox oil level.
2. Verify that full throttle lever travel results in full opening of the throttle valve(s).
3. Verify that the air filter(s) are correctly installed and secure.
4. With the ignition switched off, rotate the engine manually using the propeller and check for unusual noises, abnormal resistance or sluggishness.
5. Check the coolant level and verify that it is within the specified range.
6. With the engine running, check each ignition circuit individually at idle speed (approximately 3000 RPM). The maximum permissible engine speed reduction is 200 RPM.

7.2 25 Hours or Annually inspection (whichever occurs first)

Task	Carb.	I-Sys	NEO	Done
Both 2625 variants				
Conduct a thorough visual inspection, looking for loose or missing components and any evidence of leaks.	X	X	X	
Remove and inspect the spark plugs for wear or damage.	X	X	X	
Adjust for 0.6–0.7mm gap of spark plug		X	X	
Adjust for 0.4–0.5mm gap of spark plug	X			
Check for ignition plug colour and condition	X	X	X	
Check condition off carburettor diaphragm	X			
Check condition of carburettor needles	X			
Check linkage for play and wear	X	X	X	
Verify that no play between the throttle valve and throttle linkage		X	X	
Clean the engine	X	X	X	
Clean air filter to maintain optimal performance.	X	X	X	
Inspect spark plugs	X	X	X	
Lubricate the teeth of the starter gear.	X	X	X	
Retrieve and review the error memory from the engine display unit.		X	X	
Check all accessible screws and nuts to ensure they are tightened to the correct torque specification.	X	X	X	
Examine cable and actuating mechanisms for proper function.	X	X	X	
Inspect wires and electrical connections, focusing on the ECU power supply: • Temporarily remove **ECU fuse 1** and verify ECU power • Temporarily remove **ECU fuse 2** and verify ECU power		X	X	
Inspect the fuel filter inside the fuel supply system	X	X	X	
Remove and inspect Exhaust system for crack and deformation	X	X	X	
Inspect the cylinder wall through the exhaust port around the ports for signs of damage or wear	X	X	X	
Inspect the piston through the exhaust port for signs of damage or wear	X	X	X	
Validate through the exhaust ports, that the piston rings can move and are not fixed	X	X	X	
Verify that the throttle body linkage and the throttle discs are not lose or damaged	X	X	X	
Clean the air filters	X	X	X	
Lubricate the air filters	X	X	X	
Verify that there is no play between the throttle valve disks and the linkage		X	X	
Inspect RPM Sensor		X	X	
Inspect Water Sensor	X	X	X	

Task	Carb.	I-Sys	NEO	Done
Both 2625 variants				
Inspect Fuel Pressure		X	X	

625 SEDO variant only				
Replace the oil at the oil reservoir	X	X	X	
Inspect gears through oil window	X	X	X	
Inspect magnetic plug for accumulation of debris	X	X	X	
Reinstall magnetic plug with new O-ring	X	X	X	

Tabel 7: 25hrs checklist

CAUTION
Wrong spark plug gap size may result in poor engine performance and reduced power

CAUTION
Not properly maintained fuel filter may lead to fatal engine failures

ENVIROMENTAL NOTE
Two stroke oil and gear oil are harmful for environment and can result in allergic reaction

7.3 50 Hours or 5 years inspection (whichever occurs first)–for SEDO Modification

The SEDO modification has been validated through 50 hours of service experience. To establish a longer inspection interval, such as 100 hours or annually, SOLO requires sufficient service data to demonstrate the continued reliability of the modification.

Until sufficient service data has been accumulated, the 50-hour inspection interval shall be maintained. Based on the inspection results and accumulated service experience from a representative number of engines, SOLO may subsequently extend the inspection interval to 100 hours.

Continued customer support in recording operating hours and providing inspection findings is essential to this process. As sufficient service experience is accumulated, the applicable inspection intervals and requirements will be updated in future revisions of this manual.

Task	Carb.	I-Sys	NEO	Perf.
Check the bearing of the balancing shaft	X		X	
Replace the diaphragm of the fuel pump	X			
Replace carburettor diaphragm	X			
Inspect throttle linkage for play and wear	X	X	X	
Replace the air filter	X	X	X	
Replace the fuel filter inside the fuel supply unit		X	X	

Tabel 8: 100hrs check list

7.4 100 Hours or 5 years inspection (whichever occurs first)

Field experience has shown that a significant number of engine failures and reliability issues could have been prevented by performing the following inspections and corrective actions at the specified intervals.

To improve engine reliability and durability, the following inspections are therefore strongly recommended. Particular attention shall be given to securing of studs, nuts and other fasteners, as well as to the condition of gaskets and seals. Loose fasteners and leaking gaskets have been identified as recurring issues in service and should be detected and rectified before they develop into more serious engine faults.

Task	Carb.	I-Sys	NEO	Perf.
Perform annual inspection	X	X	X	
Replace the fuel filter in the fuel supply unit to ensure continued reliability.	X		X	
Replace the diaphragm of the fuel pump	X			
Replace carburettor diaphragm	X			
Inspect throttle linkage for play and wear	X	X	X	
Replace the cylinder bottom gasket	X	X	X	
Replace the upper cylinder head O-Rings	X	X	X	
Inspect the intake and outlet ports	X	X	X	
Replace the water system gaskets	X	X	X	

Tabel 9: 100hrs check list

7.5 400 Hours or 20 Years inspection (whichever occurs first)

- Arrange for a special inspection and / or a complete overhaul of the engine by the manufacturer.
- It is recommended to check the entire engine wiring, including all connectors, for integrity and proper connection.

If the engine has already undergone any maintenance at Solo Aircraft Engine, this maintenance can be treated as starting point of the 20-year inspection.

The engine number consists of one or two numbers. The first number is the main engine number, if there is a second number, this is the number of the modification (NEO-system, injection–system, SEDO–system). The following table refers to the first number. The statistically shown data of currently overhaul engines refer to all engine supplied to the marked of this kind of engine type.

Due to the introduction of the 20-year inspection the affected engine overhaul is extended as follows, if the engine has not already been overhauled / repaired / inspected / test at Solo Aircraft Engines GmbH, to reduce aircraft downtime.

For 2625 – 02 series:

Engine number	Year of overhaul	Production year
0 – 24	Mai 2027	1996 – 1999
25 – 56	Mai 2028	2000 – 2002
57 – 88	Mai 2029	2003 – 2006
88 – 127	Mai 2030	2006 – 2009
128 – 173	Mai 2031	2010 – 2011

Tabel 10: Reference list for 2625–02

7.6 Unschedules Maintenance

In case of any indication of engine overspeed, broken belts or propeller strike, the engines needs to undergo an inspection iaw. 7.5

8. Inspection of the Engine components

8.1 Mixture verification test

Applicable variants: All

Air-fuel mixture settings are best assessed by measuring the exhaust gas temperature (EGT). In addition, the condition of the spark plugs provides an indication of the combustion process and can be used as a secondary indication of the fuel mixture. The following procedure may be used to verify the mixture by inspecting the visual appearance and condition of the spark plugs:

1. Verify that the fuel-to-oil ratio is correctly mix in accordance to Section 2.4.
2. If the mixture ratio is uncertain, replace the fuel with correctly mixed fuel.
3. Ensure that sufficient fuel is available for the complete test.
4. Remove one spark plug from each cylinder and inspect its condition. Take a photograph of each spark plug for comparison and documentation.
5. Check the spark-plug gap in accordance with the applicable engine specification.
6. If the engine is operated for the first time or after an extended period of storage, additionally perform the following steps:
    a. Rotate the engine until the pistons are at bottom dead centre.
    b. Add approximately **5 ml of two-stroke oil** to each cylinder.
    c. Reinstall the spark plugs and tighten them to the specified torque.
    d. Remove the air filter(s).
    e. Add approximately **5 ml of fuel/oil mixture** to each intake port.
    f. Rotate the engine by hand for a minimum of **five complete cycles per cylinder** to distribute the added mixture.
    g. Reinstall the air filter(s).
7. Start the engine and operate it between 1,000 and 2,700 RPM until the coolant temperature reaches 40 °C.
8. Increase the engine speed to 3,500–4,000 RPM and maintain this range until the coolant temperature reaches 80 °C.
9. Increase the engine speed to 5,500 RPM for a maximum of 1 minute. The coolant temperature shall not exceed 110 °C.
10. Shut down the engine.
11. Remove one spark plug from each cylinder and inspect the condition of the spark plugs. Take a photograph of each spark plug and compare the condition with the applicable reference images.
12. For carburetted engines, adjust the mixture as required using the **H (high-speed) nozzle**. For fuel-injected engines, contact SOLO Aircraft Engines GmbH for evaluation and any required adjustment.
13. Reinstall the spark plugs and tighten them to the specified torque.

14. If there are no indications of an excessively lean mixture, repeat the full-power operation for a maximum of **1 minute**, shut down and inspect the spark plug condition.

CAUTION
Verify that the gap of the park plug is in the range of 0,6–0,7mm for injection systems and 0,4–0,5mm for carburettor systems.

8.1.1 Spark Plug comparison pictures

Abnormal Spark Plug Condition: too lean mixture:

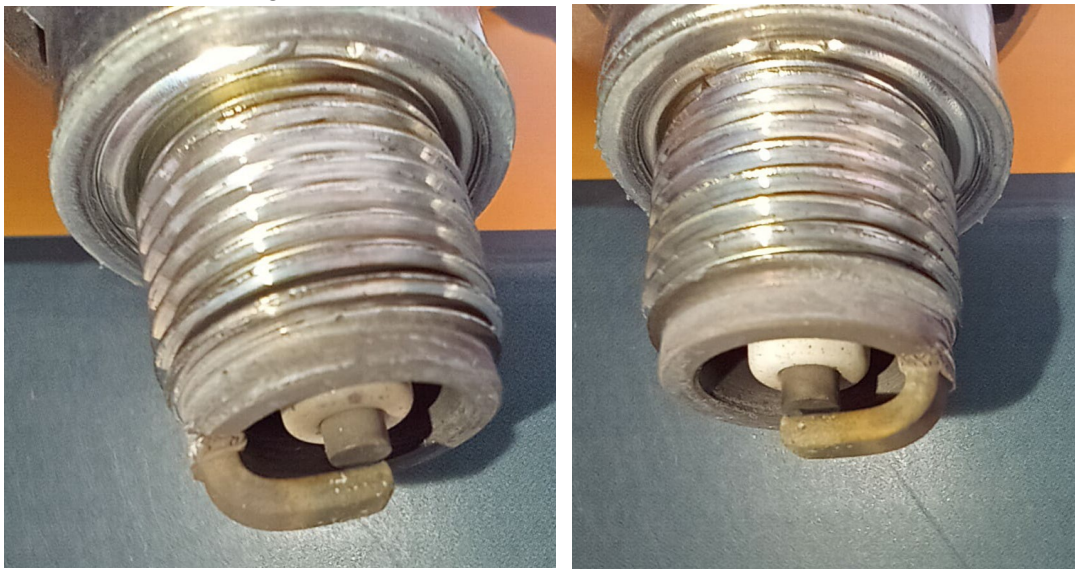

Figure 3 - too lean mixture

Normal Spark Plug Condition: mixture provides sufficient lubrication:



Figure 4 - correct mixture

8.2 Cylinder head inspection

1. Remove Cylinder head in accordance with Section 10.4
2. Carefully remove all combustion residues and carbon deposits from the cylinder head. Use a suitable solvent to remove oil residues and a suitable non-damaging brush to remove stubborn deposits.
3. Inspect the combustion chamber and cylinder-head surface for:
    a. cracks, particularly around the spark-plug holes and combustion chamber;
    b. erosion, pitting or other signs of abnormal combustion;
    c. overheating or discolouration;
    d. mechanical damage or deformation.
4. Inspect both spark-plug threads for damage, wear and contamination. Verify that the spark plugs can be installed and removed without abnormal resistance.
5. Inspect the cylinder-head sealing surfaces for damage, deformation, corrosion and contamination. The sealing surfaces shall be clean and free from damage that could affect sealing.
6. Inspect the cooling-water passages and sealing areas for signs of corrosion, deposits or leakage.
7. Inspect the cylinder-head mounting and sealing areas for evidence of combustion-gas leakage, coolant leakage or abnormal movement.
8. If cracks, significant erosion, deformation or other damage affecting the integrity or sealing of the cylinder head are identified, the cylinder head shall be referred to SOLO Aircraft Engines GmbH for further assessment before reuse.

8.3 Cylinder inspection

1. Visually inspect the cylinder coating for damage, including scratches, scoring, rubbing marks and other surface damage.
2. Measure the cylinder bore in two directions: parallel and perpendicular to the crankshaft axis. Measurements shall be taken at the following positions:

Dimension	New	Wear limit	Result
10 mm below top	76 mm +/- 0.005	76.01 mm	
30 mm below top	76 mm +/- 0.005	76.01 mm	
25 mm above bottom	76 mm +0.01	76.02 mm	

Tabel 11: Cylinder dimensions

3. Inspect the O-ring grooves for the cylinder-head cooling-water jacket seals for damage, contamination and wear.
4. Inspect the complete cylinder for cracks, damage and deterioration of the sealing surfaces.
5. Remove oil-carbon deposits from the cylinder coating and exhaust port.

6. Check the cylinder-head stud length, measured from the upper cylinder flange to the end of the stud. The maximum permissible length is 54.7 mm.

8.3.1 Typical Cylinder Damages and Causes

The following figures show typical examples of cylinder-wall and port damage that may be identified during inspection.

Damaged Cylinder walls:

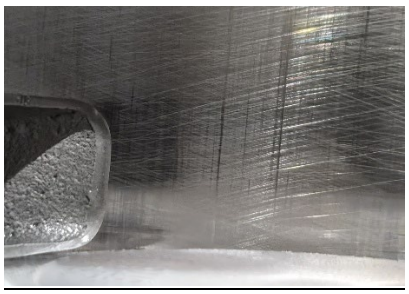

Figure 5: Good port

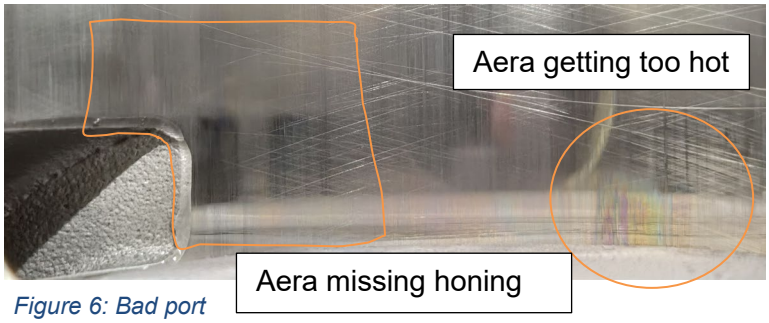

Figure 6: Bad port

The cylinder honing pattern terminates correctly before the port edge. The port surface is free from abnormal scoring, overheating or other visible damage.

The honing pattern is missing or damaged near the port area. Discolouration, including rainbow-coloured areas, may indicate excessive local temperature or inadequate lubrication. Such conditions may result from an incorrect oil-to-fuel ratio, excessive exhaust-gas temperature or inadequate piston cooling/scavenging.

Foreign-Object Damage

.



Figure 7: Damaged Port

Damage to the port may occur if a foreign object enters the combustion chamber through the port and is subsequently struck by the piston. This can result in damage to the piston, cylinder wall and port area. If significant damage is present, the affected components shall be replaced.

Inlet Port Web Damage

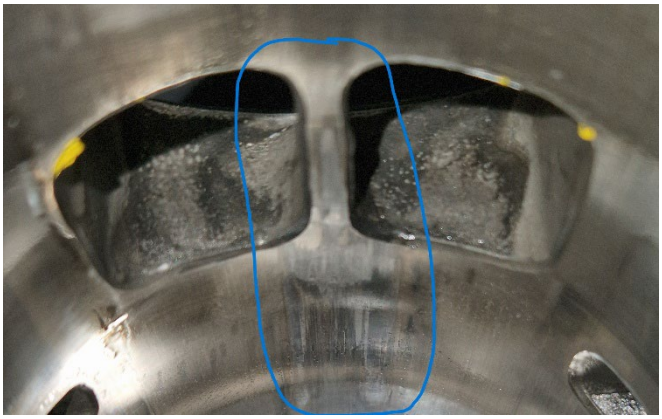

Figure 8 Damage of the inlet area

The inlet-port web supporting the compression ring may become damaged as a result of inadequate or incorrect lubrication or abnormal piston operation. Continued operation may cause the piston to contact the damaged area, progressively extending the damage towards the upper cylinder area. In severe cases, the piston may become trapped at the inlet port during its stroke, resulting in significant damage to the inlet side of the cylinder.

Any cylinder showing abnormal scoring, overheating, port damage or deformation shall be assessed against the applicable dimensional and service limits before further operation. Feel free to submit questions to Solo Aircraft Engines GmbH for getting clarification on defects.

8.4 Piston inspection

1. Carefully remove all combustion residues from the piston crown. Avoid damaging the piston surface.
2. Measure the piston diameter at the specified measurement points. Measure perpendicular to the piston-pin axis:

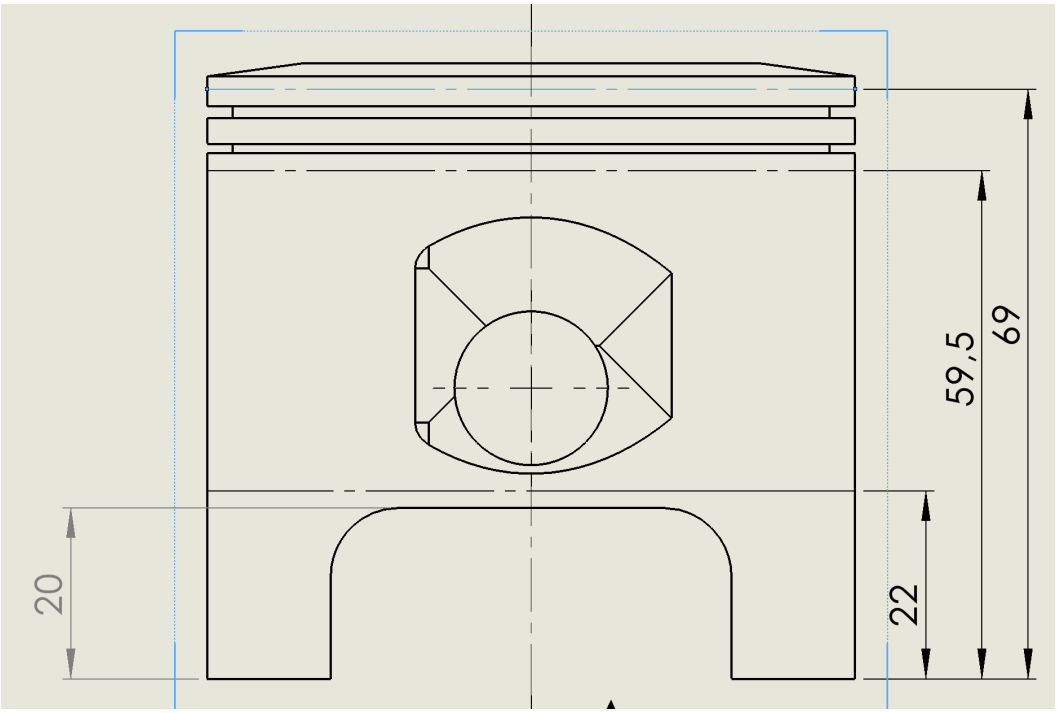

Figure 9: position for piston diameter check

Dimension	New	Wear limit	Result
D1: 22 mm above bottom	75.65 mm +/- 0.06	75.5 mm	
D2: 59.5 mm above bottom	75.80 mm +/- 0.08	75.7 mm	
D3: 69 mm above bottom	75,90 mm +/- 0,05	75.8 mm	

Tabel 12: Piston dimensions

3. Inspect the piston-ring grooves for damage, carbon deposits and excessive vertical ring clearance.
    - **New:** 0.05–0.10 mm
    - **Wear limit:** 0.20 mm

8.4.1 Piston-Ring Inspection

1. Inspect the piston rings for wear, damage, cracks and deformation.
2. Check the piston-ring end gap by inserting the ring squarely into the cylinder bore and measuring the gap.
    - **New:** 0.20–0.35 mm
    - **Wear limit:** 0.40 mm
3. With the piston ring correctly positioned in the cylinder bore, inspect the ring-to-cylinder contact. **No continuous light gap shall be visible** between the ring and cylinder wall.
4. Clean the piston-ring grooves and verify that the piston rings move freely within the grooves before reassembly.
5. Ensure that the notch is properly located and the ring is locked in place, if installed.

8.4.2 Typical Piston Damage and Causes

Piston seizure at the exhaust-port area may occur as a result of:

- An excessively lean fuel mixture.
- Excessive combustion-chamber temperature.
- An incorrect fuel-to-oil mixing ratio.



Figure 10: Seized piston

Piston seizure or scoring in the inlet-port area may be associated with the following conditions:

- An excessively lean fuel mixture.
- An incorrect fuel-to-oil mixing ratio.
- Inadequate or abnormal engine scavenging.
- Restrictions or other issues in the exhaust system.
- Incorrect ignition timing.



Figure 11: seized piston

Piston seizure or significant piston damage may occur due to:

- A foreign object entering the engine through an intake or exhaust port.
- A damaged or failed spark plug.
- A broken or failed piston ring.
- A foreign object or component entering the engine during maintenance or installation.



Figure 12: seized piston

8.5 Wrist pin inspection

1. Inspect the wrist pin for **pitting, scoring, grooves, burrs and other surface damage**.
2. Perform a fingernail inspection by lightly drawing a clean fingernail **across** the suspected defect. Any catching, snagging or noticeable surface irregularity indicates a discontinuity requiring further inspection.
3. Inspect the wrist pin for **discolouration or signs of overheating**. **Blue discolouration indicates exposure to excessive temperature and is not permitted.** If any blue discolouration is present, the wrist pin shall be replaced.
4. Check the wrist-pin outside diameter:
    - **15.90–15.99 mm**
5. If significant pitting, scoring, surface damage or dimensional wear is detected, the wrist pin shall be replaced or referred to SOLO Aircraft Engines GmbH for further assessment.

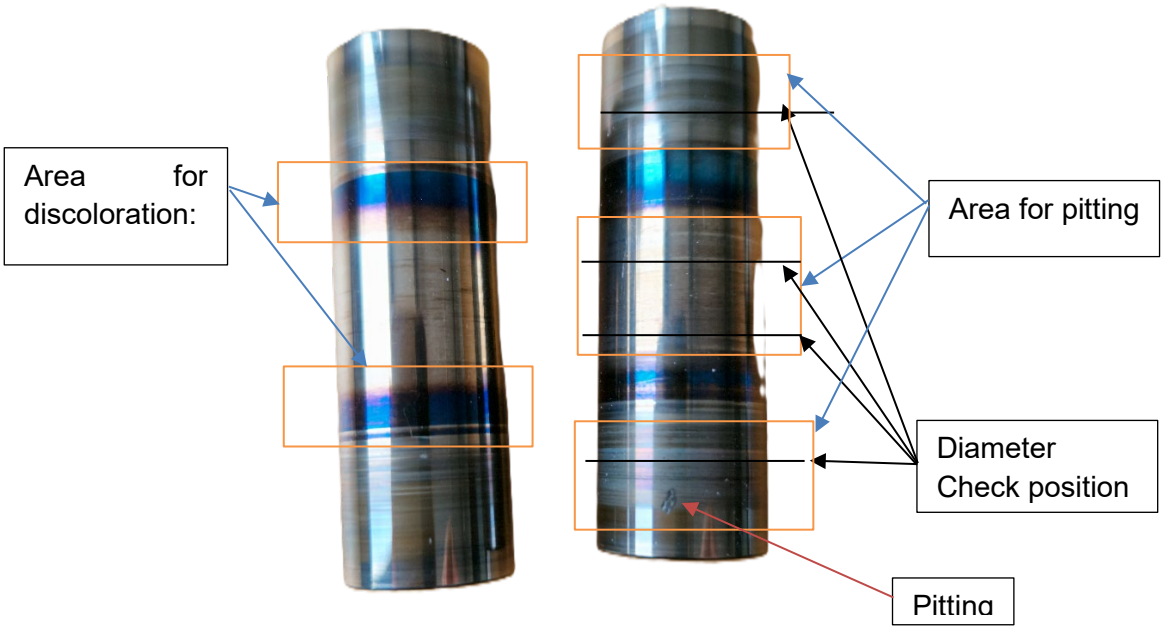

Figure 13 Wrist pin inspection

8.6 Alternator Rotor inspection

Visually inspect the rotor for damage, loose magnets and corrosion. Pay particular attention to the area around the crankshaft interface.

If any damage, loose magnets or significant corrosion is identified, the affected component shall be replaced.

8.7 Alternator Stator inspection

Visually inspect the stator for damage and loose components. Pay particular attention to the rear area where the stator contacts the supporting bracket.

The stator is oil-filled and epoxy-coated. If any oil leakage or damage to the epoxy coating is identified, the stator shall be replaced.

Inspect the electrical connector and wiring in detail for signs of cable wear, damage or discolouration. If any indication of damage or overheating is found, the affected crimp contact shall be replaced.

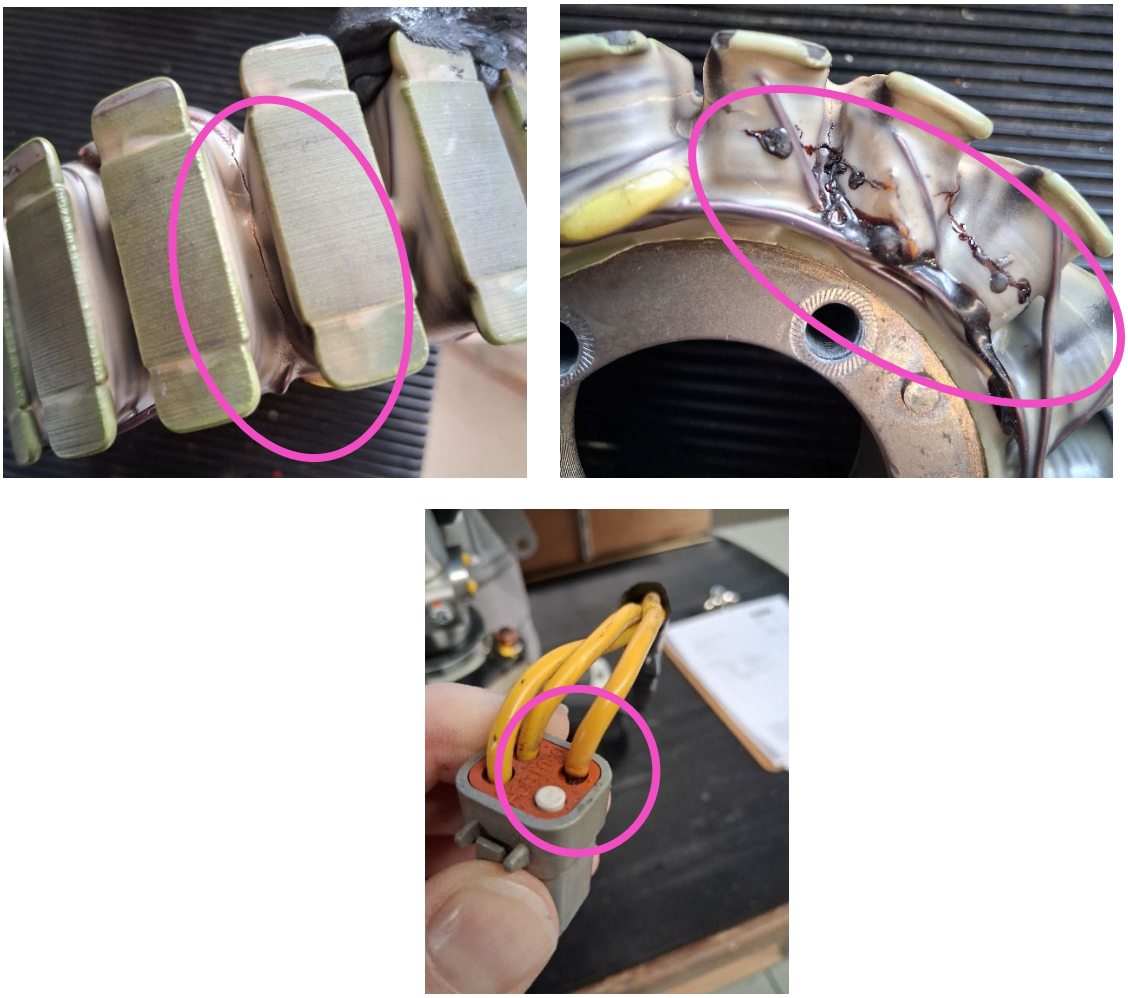

Figure 14 Stator failures

8.8 RPM Sensor inspection

Clean the surface of the RPM sensor and inspect it for accumulated magnetic particles.

If magnetic particles are found, inspect the engine for possible mechanical or operational abnormalities.

If engine operating abnormalities are identified, the RPM sensor shall be replaced, and the source of the magnetic particles shall be investigated.

8.9 Fuel Fuel pump inspection

Applicable variants (if supplied by SOLO): 2625–02 i, 2625–02 is, 2625–02 in, 2625–02 ns

Check the fuel-pump delivery pressure and verify that it is **greater than 3 bar**. Check the fuel lines for any indication of pressure oscillation or abnormal fuel pulsation.

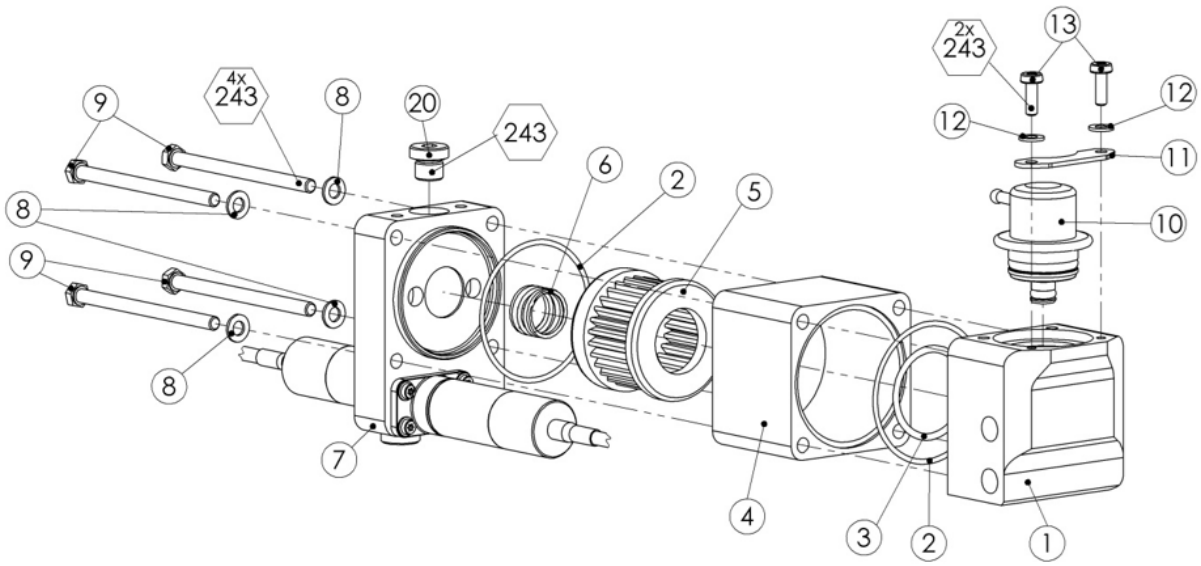

Figure 15 Fuel pump

The SOLO Fuel Supply Unit incorporates a **10 µm filter (Item 5)** downstream of the fuel pumps to protect the fuel injectors from contamination.

The filter shall be inspected at the specified maintenance intervals and whenever fuel-supply problems or a fuel-pump malfunction is suspected. If debris or contamination is found, inspect the aircraft fuel tank and fuel system to identify the source of contamination. Any additional fuel filter, where installed, shall also be inspected and cleaned or replaced as required.

If contamination is found in the filter, the Fuel Supply Unit shall be returned to **SOLO Aircraft Engines GmbH** for inspection and overhaul. Where no additional upstream fuel filter is installed, the aircraft manufacturer should consider its installation to provide additional protection for the fuel pumps and injection system.

The Fuel Supply Unit can be opened by removing the bolts **(Item 9)**.

Gaskets (Items 2 and 3) shall be replaced before reassembly.



Figure 16 – Debris at filter in pump

WARNING
Fuel is highly flammable. Before opening or servicing the Fuel Supply Unit, stop the engine, switch off all ignition and electrical power sources, and prevent any source of ignition from coming into contact with the fuel. Allow the fuel system to depressurise and clean up any spilled fuel before continuing maintenance.

WARNING
Debris as stated in Figure 16 may lead to fuel pressure loss due to pump blockage. The reason for such debris need to be evaluated and the tank need to be inspected and cleaned carefully to avoid additional debris entering the fuel pumps.

9. Maintenance Procedures

9.1 SEDO engine variant maintenance

9.1.1 SEDO Gearbox – Oil replacement

The SEDO balancing shaft and associated gears are lubricated by a dedicated gear-oil system. The gear oil is contained in a separate oil sump and is independent of the engine fuel and combustion lubrication system.

The oil level shall be checked before the first flight of each day and maintained within the specified operating range.

CAUTION
Owner Maintenance: The oil replacement procedure described in this section is an owner-permitted maintenance task and may be performed by the aircraft owner/operator, provided that the applicable aircraft maintenance regulations and aircraft manufacturer's maintenance instructions permit such work.

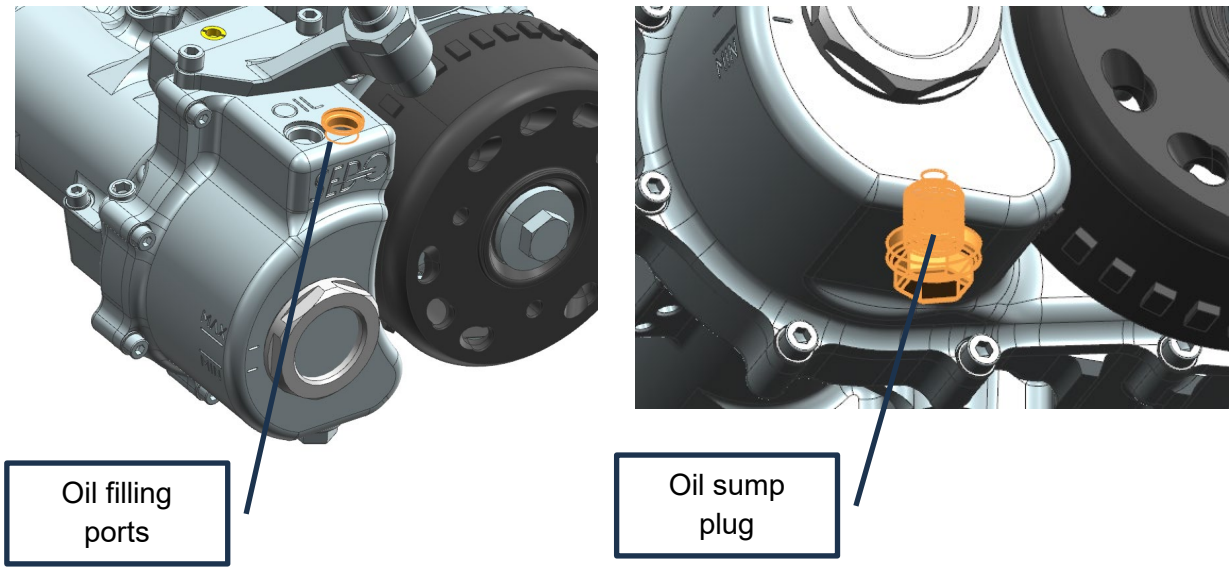

Figure 17 - Oil filling ports and sump plug

Procedure:

1. Extend the engine fully to place the engine and SEDO gearbox in the required upright position.
2. Place a suitable container below the drain plug. Remove the drain plug from the bottom of the crankcase.
3. Allow the gearbox oil to drain completely. Ensure that all drained oil is collected and that no oil is spilled into the engine compartment.
4. Inspect the magnetic drain plug for metallic particles or other signs of abnormal wear. If metallic particles larger than 1 mm are found, do not return the engine to service. Contact SOLO Aircraft Engines for further inspection and corrective-action instructions.
5. Clean the magnetic drain plug and install it with a new sealing element, refer to parts list for part number. Torque to 14Nm.
6. Remove the oil-filler plug and the breather cap from the top of the SEDO gearbox.
7. Replace the sealing element, refer to parts list for part number.
8. Fill the gearbox with **180 ml** of **Liqui Moly 75W-90 GL5** gear oil.
9. Install and secure the oil-filler plug. Torque to 14Nm.
10. Inspect the gearbox and drain plug for oil leakage. Confirm that the oil level is correct before returning the engine to service.

ENVIROMENTAL NOTE
Gear oil may cause skin and serious eye irritation. Harmful if swallowed and may be fatal if it enters the airways. Avoid release to the environment, as it is harmful to aquatic organisms. Use appropriate protective equipment and dispose of used oil in accordance with applicable regulations.

NOTICE
When replacing the oil screen, note that two versions are in service: one using a **flat gasket** and one using an **O-ring seal**. Ensure that the correct seal type is installed for the applicable oil-screen version.

9.1.2 SEDO Gearbox Oil – Inspection and Replenishment

The balancing shaft and associated gears are lubricated by a dedicated gear-oil system. The gear oil is contained in an oil sump and is not part of the engine fuel or combustion lubrication system.

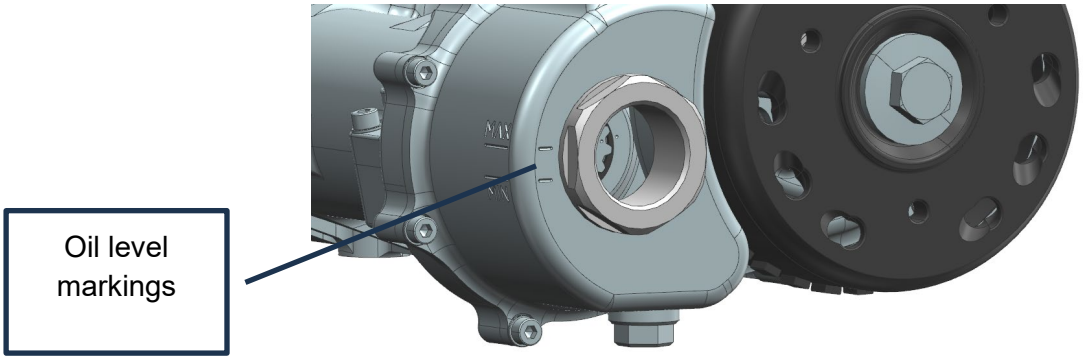

Figure 18: Oil level markings

The oil level shall be checked by the operator through the oil-level inspection window provided on the balancing-system oil sump **before the first flight of each day**. The oil level shall be within the specified range before the engine is operated.

CAUTION
Owner Maintenance: The oil replacement procedure described in this section is an owner-permitted maintenance task and may be performed by the aircraft owner/operator, provided that the applicable aircraft maintenance regulations and aircraft manufacturer's maintenance instructions permit such work.

Procedure:

1. Extend the engine fully to place the engine and SEDO gearbox in the required upright position.
2. Remove the oil-filler plug and the breather cap from the top of the SEDO gearbox.
3. Fill the gearbox with **Liqui Moly 75W-90 GL5** gear oil until the level is within the allowable ranges as illustrated on the oil screen.
4. Install and secure the oil-filler plug and breather plug. Torque to 14Nm.
5. Inspect the gearbox and drain plug for oil leakage. Confirm that the oil level is correct before returning the engine to service.

WARNING
The SEDO gear-oil system is independent of the fuel-oil mixture used for engine lubrication and combustion. Gear oil from the SEDO system must not be added to the fuel or used as engine fuel-oil mixture.

CAUTION
Any indication of oil leakage from the SEDO system shall be investigated and rectified before further engine operation. Continued operation with insufficient gear-oil quantity may result in inadequate lubrication of the balancing-shaft bearings and gears and may cause damage to the balancing system.

9.1.3 SEDO Gearbox – circlip replacement procedure

The circlip (Part 6) must be inspected annually. If any damages are observed to the circlip the circlip can be replaced. If damages are observed to the shaft caused by the circlip, the circlip can be replaced by and end-cap, with a securing bolt.

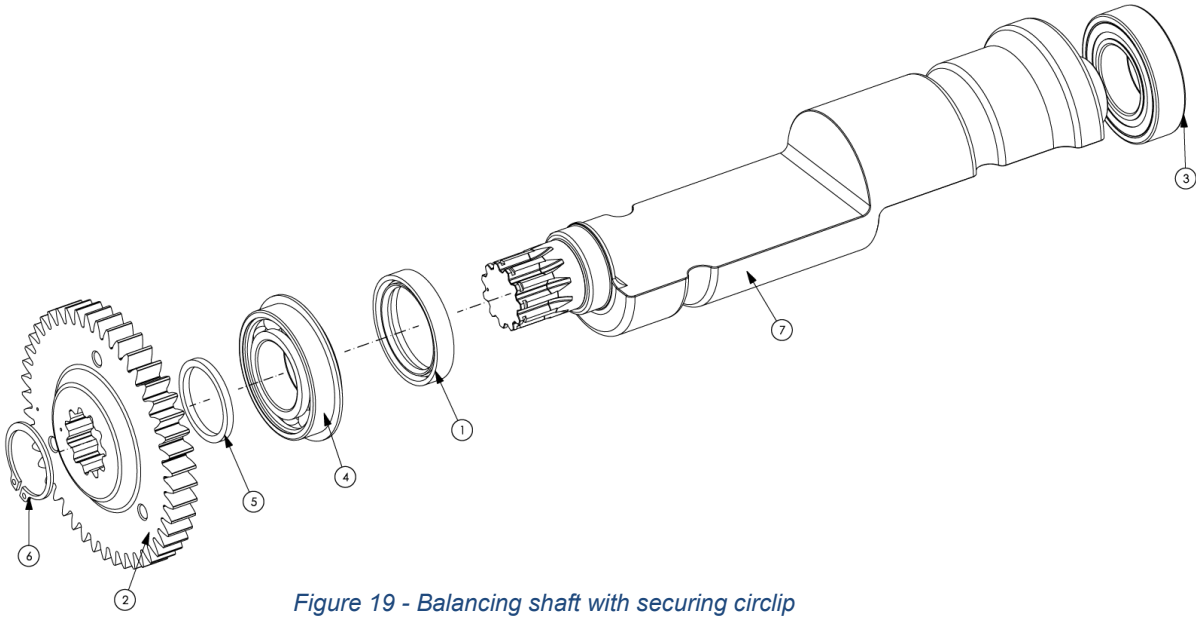

Figure 19 - Balancing shaft with securing circlip

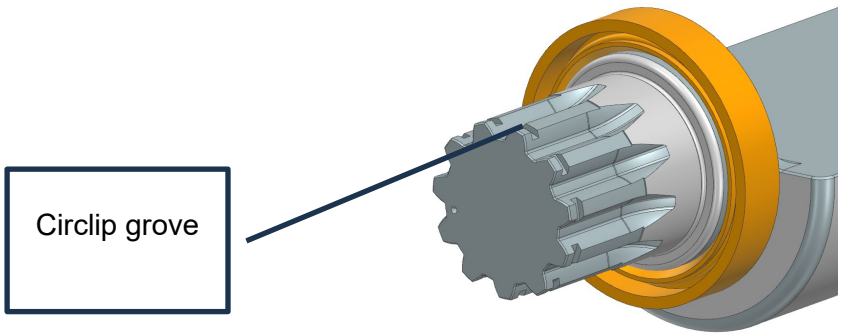

Figure 20 - balancing shaft spline with circlip grove

Procedure to replace circlip:

1. Drain the gear oil iaw. section 10.1.1
2. Remove the alternator cap and alternator iaw. section 10.12
3. Remove the rear cover of the engine
4. Remove the balancing shaft retaining ring, gear and gear spacer
5. Position the drilling jig over the balancing shaft and fasten it to the crank case

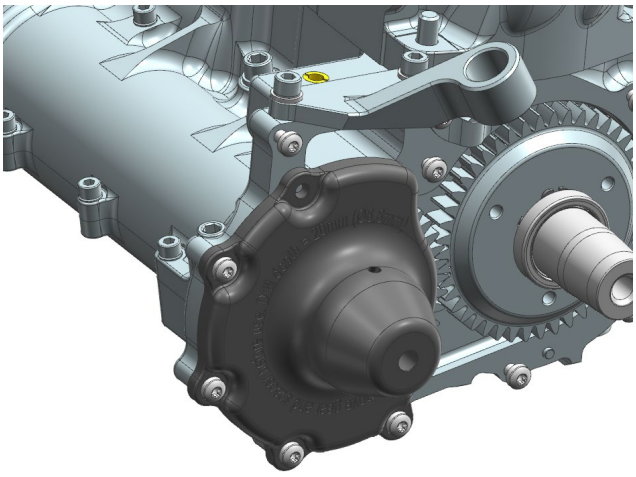

Figure 21 - Drill jig positioning

6. Use a 6.8mm drill to create a 20mm deep hole. Peg regularly to ensure proper chip evacuation. The top hole in the drilling jig can be used to introduce cutting fluid to the drilling operation.
7. Remove the drilling jig and thoroughly clean the work area.
8. Tap the hole **M8 × 1.25** to a depth of **15 mm**
9. Ensure that no metal chips or swarf have entered the gearbox. Use a suitable magnet to collect any remaining ferrous particles
10. Thoroughly clean and degrease the tapped hole to remove oil and contamination
11. Install the balancing-shaft end cap onto the spline.
12. Install the **M8 retaining bolt** (M8x20-1.25–DIN933–ZN (8.8)), using **Loctite 270** and tighten to **25 Nm**. Use a corresponding washer M8x25x3–ZN.
13. Allow the thread-locking compound to cure for **24 hours** before operating the engine.
14. Install the gear spacer
15. Install the gear and ensure the timing marks are correctly aligned.
16. Install the gear retaining washer
17. Ensure the rear surface cover seal surface is clean and reinstall the rear cover. Flange sealant can be added to the split surface of the crankcase. Ensure both dowel pins are present.
18. Fasten the rear cover using its bolts according to the specified torque specification.
19. Fill the SEDO gearbox with **180 ml** of the specified gear oil.

20. Rotate the balancing shaft manually and verify smooth operation without abnormal resistance or noise.
21. Start the engine and perform an operational check. Verify correct operation of the SEDO system and check for oil leakage.

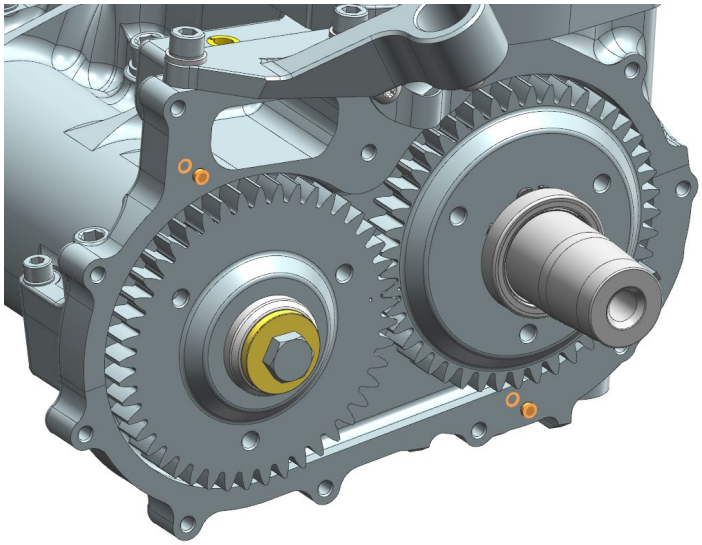

Figure 22 - Replacement of circlip with end cap and bolt

NOTICE
The parts required for this maintenance action are available from SOLO Aircraft Engines GmbH.

9.1.4 Rear cover removal

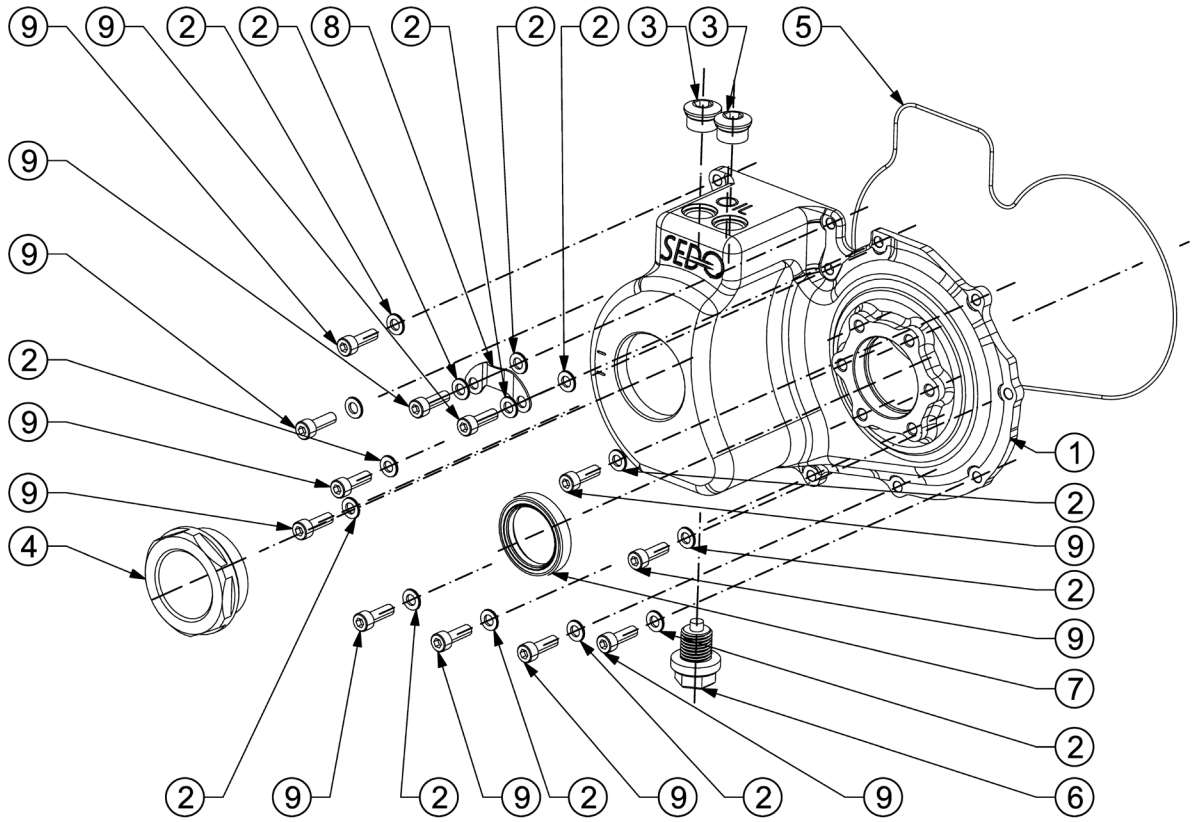

Figure 23 – Rear Cover

1. Drain the gear oil iaw. section 10.1.1
2. Remove the alternator cap and alternator iaw. section 10.12
3. Remove all screws marked with 9

9.1.5 SEDO Gearbox – Fit / Replacement of sight glass

The sight glass plug is availalbe in 2 configuraitons. The type A must be locked with Locktite, and replaement has to be performed by an approved maintenance organisation. Type B uses a locking torque, and can be installed by the operater.

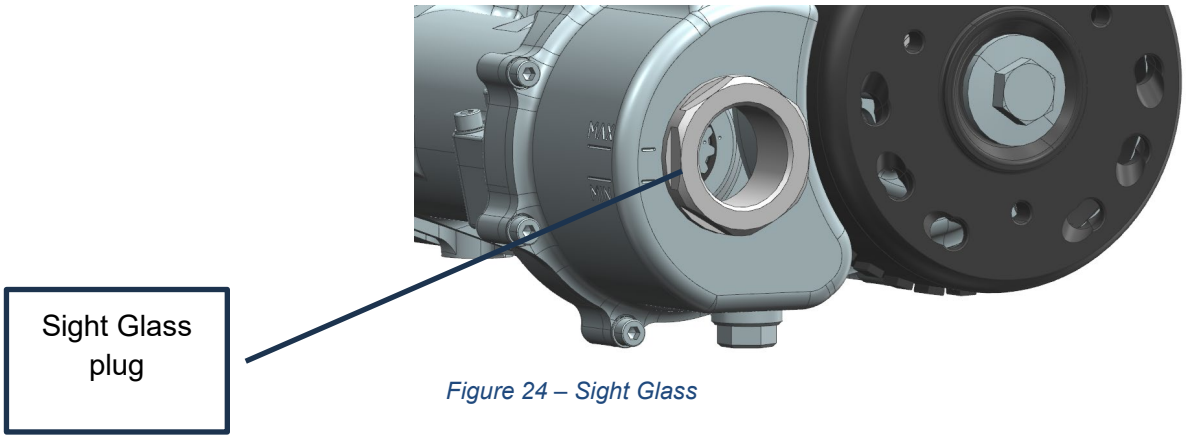

Figure 24 – Sight Glass

Replacement procedure:

1. Drain the gear oil through the gearbox sump drain plug.
2. Remove the oil-level sight glass type A.
3. Clean threads on both ends with Asetone or Nitro-thinners.
4. Replace the oil-level sight glass type B, apply Loctite 270 and torque to 24Nm.
5. Fill the SEDO gearbox with **180 ml** of the specified gear oil.
6. Rotate the balancing shaft manually and verify smooth operation without abnormal resistance or noise.
7. Start the engine and perform an operational check. Verify correct operation of the SEDO system and check for oil leakage.

9.2 Carburettor adjustment procedure

The **2625–02** is equipped with two diaphragm carburettors, with each carburettor supplying its associated cylinder.

Over the production history of the 2625-series engine, three different carburettor configurations have been used. The applicable carburettor is dependent on the engine variant and production configuration.

Carburettor	Round cover	**Square Cover**			
		2625-02		**2625–02**	
Nozzle		**HD**	**LD**	**HD**	**LD**
Mikuni BN 38					
Mikuni 38 34 55 (black)		127.5	65 / 75	117.5	60 / 70
Mikuni 38 34 8114 (gold)		135	65	127.5	60

Tabel 13: List of nozzles for carburettor

If the engine is not operating correctly, adjustment of the carburettor nozzles may be required. Before making any adjustment, carefully turn the applicable nozzle fully in and record the number of turns from its original setting.

As a general starting point, the needle setting is approximately **0.75 to 1.5 turns out** from fully seated. Final adjustment shall be based on engine operation and the applicable engine specifications.

The following figure provides a representative carburettor layout, based on the Mikuni BN28 manual:

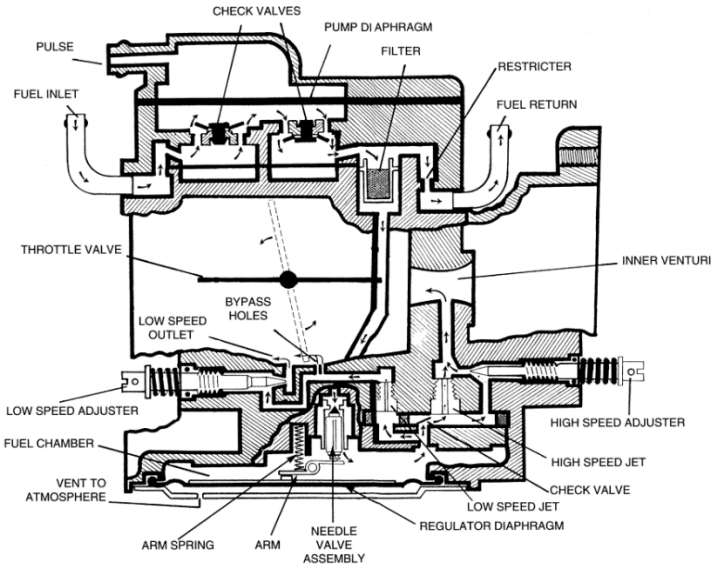

Figure 25: Simplified diagram BN38

9.2.1 MIKUNI BN 38 Carburator

The Mikuni BN38 carburettor incorporates a fixed main jet that controls approximately **75% of the fuel flow at wide-open throttle.** The main jet is integrated into the carburettor and is not adjustable or replaceable.

Fine adjustment of the high-speed fuel mixture is performed using the needle marked **“H”**. The nominal setting is **1 turn open** from the fully seated position. Where required, the mixture may be adjusted slightly leaner to approximately **7/8 turn open**.

The low-speed mixture is controlled by the needle marked **“L”**. The typical setting is **½ turn open** from the fully seated position. This setting shall not be changed unless specifically authorised by the applicable SOLO maintenance procedure.

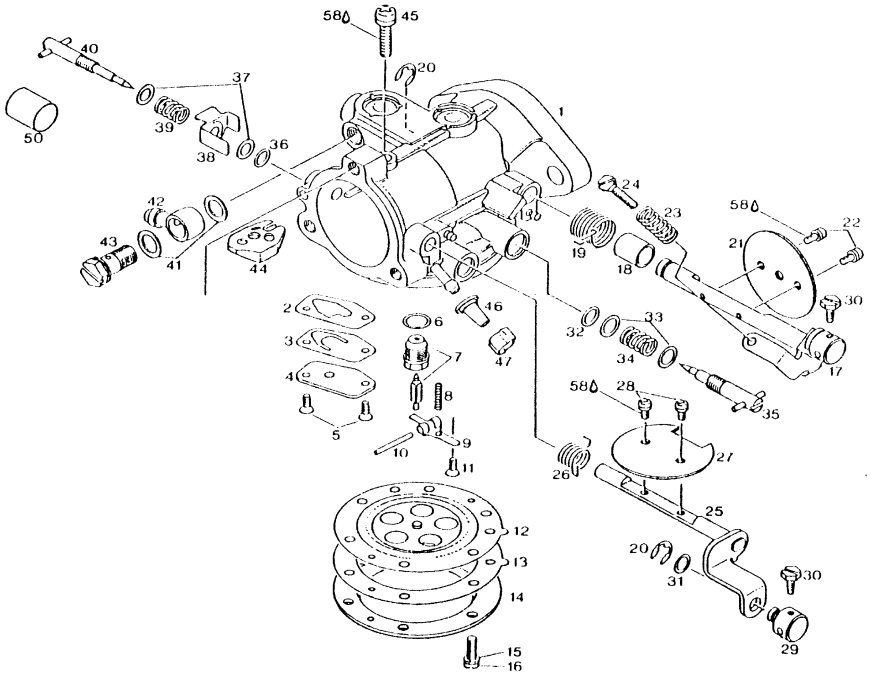

Figure 26 - BN38 carburettor

9.2.2 MIKUNI BN 38-34-55 Carburator

The Mikuni BN38-34-55 carburettor incorporates an exchangeable main jet that controls approximately **75% of the fuel flow at wide-open throttle**. The specified main-jet sizes are:

- **2625–02:** 117.5

Fine adjustment of the high-speed fuel mixture is provided by the externally accessible needle marked **“H”**. The needle is factory-adjusted and incorporates a mechanical plastic limiter that restricts adjustment to approximately **¼ turn in the lean direction**. The needle shall initially be in the **left-hand (counterclockwise) end position**. Leaner adjustment is primarily intended for operation at airfields above approximately **1,000 m AMSL**.

The low-speed mixture is controlled by the needle marked **“L”**. The typical setting is **½ turn open** from the fully seated position and shall not normally be adjusted unless specified by the applicable SOLO maintenance procedure.

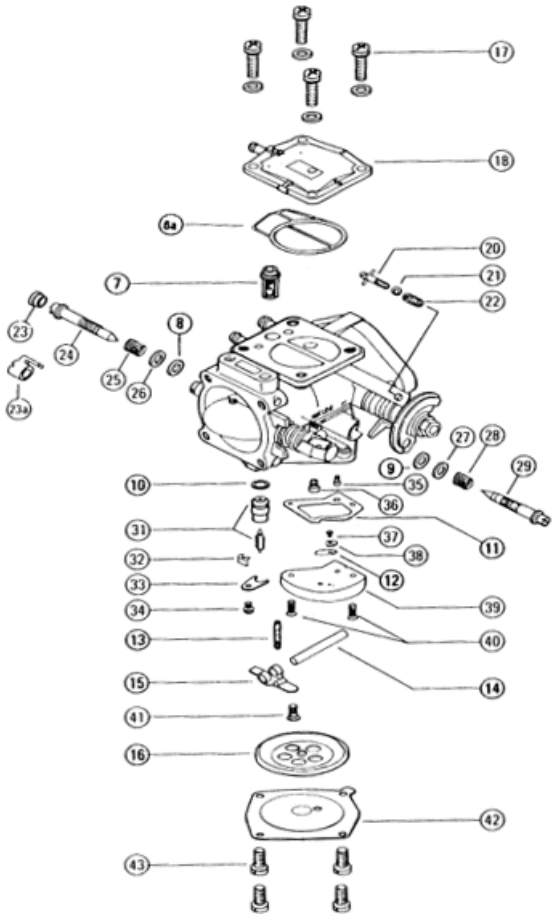

Figure 27 - BN 38-34-55

9.2.3 Adjustment of the mixture of SOLO 2625 with dual carburettors

The carburettor adjustment procedure is essentially identical for both carburettors.

- Establish the typical carburettor settings as specified in the preceding section.
- Measure the exhaust gas temperature (EGT) using Ni-CrNi thermocouples installed through suitable measuring ports in the Y-shaped exhaust manifolds, approximately 100 mm downstream of the cylinder flanges. EGT shall be measured in both exhaust branches.
- Start the engine and warm it up until the coolant temperature reaches 40 °C (104 °F).
- Adjust both idle-speed screws so that the engine operates at 2,300–2,600 RPM and the EGT of each cylinder is 230 ± 20 °C.
- For improved starting, the air filters may initially be removed. Adjust the two throttle valves so that their opening angle is identical, with an opening of approximately 1 mm.
- Set the throttle to wide-open throttle (WOT) and monitor both EGTs until stable maximum temperatures are reached. Allow approximately 3 minutes for the temperatures to stabilise.
- Adjust the carburettors so that the maximum stable EGT is 630–640 °C.
- Do not make the adjustment before the EGT has stabilised, as premature adjustment may result in an excessively lean mixture.
- The difference between the two EGT readings shall not exceed 30 °C.

9.3 Throttle Body Removal

In case access to the engine intake is required, perform the following steps to remove the throttle body:

Step	Operation	Tools, aid	Check
1	Clean engine before disassembly.	Cleaner	
2	Remove engine from mounting frame as described at the aircraft maintenance manual (incl. Waterbridge, Exhaust)	Tools per Aircraft Maintenance Manual	
3	Disconnect the Throttle linkage	Small screw driver	
4	Disconnect all fuel lines from the system	Wrench	
5	Disconnect Throttle Position sensor	Not needed	
6	Disconnect the fuel injector wires	Not needed	
7a	For new throttle body: Loose clamps marked in blue	Screwdriver, Wrench Size 6 - 7	
8a	Remove new throttle body from the rubber sockets		

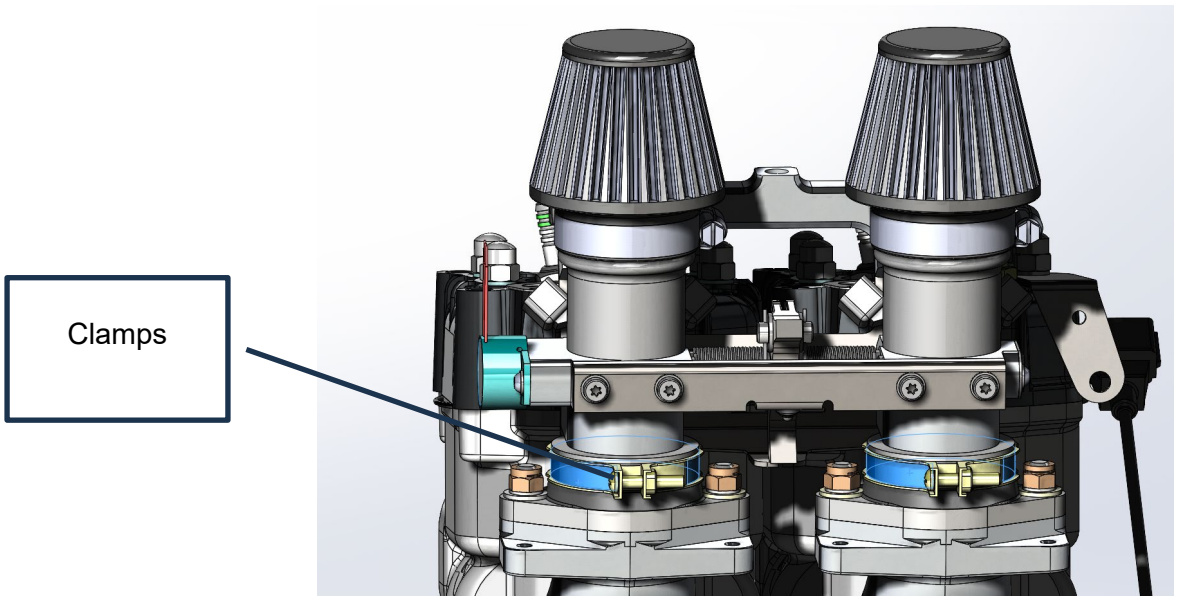

Figure 28: Remove throttle body–NEW throttle body version

Step	Operation	Tools, aid	Check
6b	Remove the emergency flue lines (from injectors at the rear end)	Sharp knife, side cutter for safety wire	
7b	For new throttle body: Loose clamps marked in blue	Screwdriver, Wrench Size 6 - 7	
8b	Remove old throttle body from the rubber sockets		
6c	Remove hex nuts or allen screws	Wrench or allen wrench	

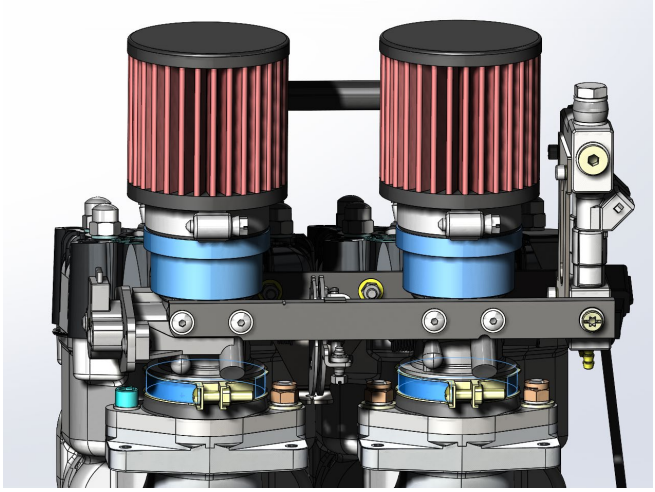

Figure 29: Remove old throttle body

Step	Operation	Tools, aid	Check
6c	Remove hex nuts or allen screws	Wrench or allen wrench	
7	Remove carburettors		

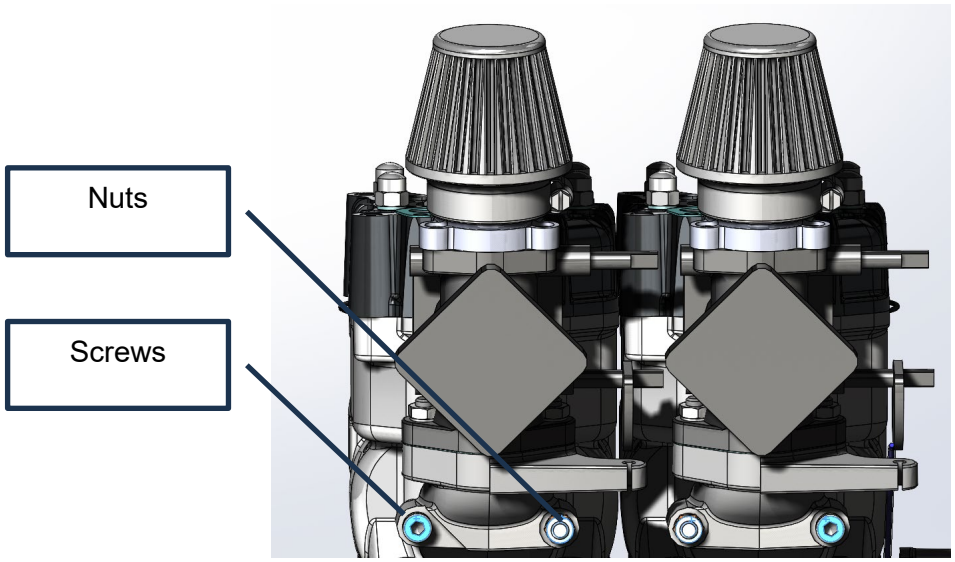

Figure 30: Remove carburettor version

9.4 Cylinder Head Removal

Applicable variants: All

Perform all steps as described in Section 10.3 to remove Throttle body

Step	Task	Tool	Perf
1	Remove throttle body		
2	Remove hex head nuts from the cylinder head	Wrench No. 8	
3	Dispose washer 00 61 365 underneath the nuts		
4	Remove both cylinder heads		

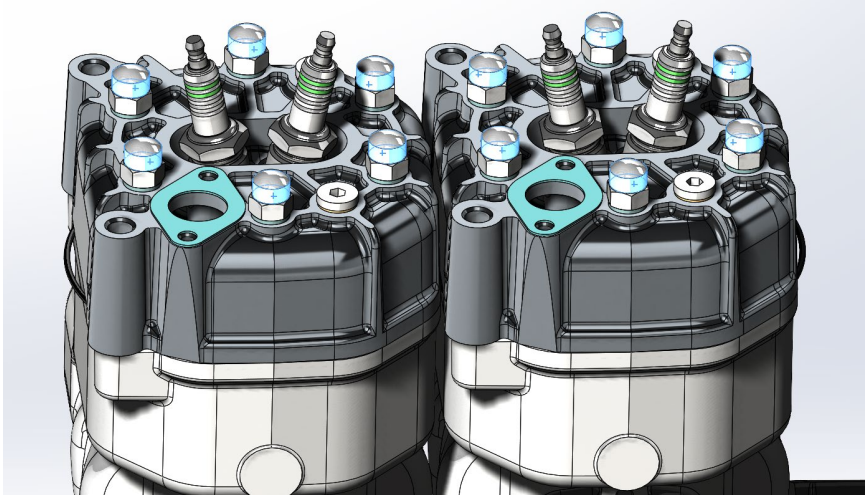

Figure 31: Remove head screws

9.5 Removal of Cylinder

Applicable variants: All

Perform all steps as described in Section 10.4

Step	Task	Tool	Perf
1	remove and dispose O-Rings at cylinder head		
2	remove and dispose hex nuts and screws at cylinder base		
3	remove and dispose cylinder base gasket		

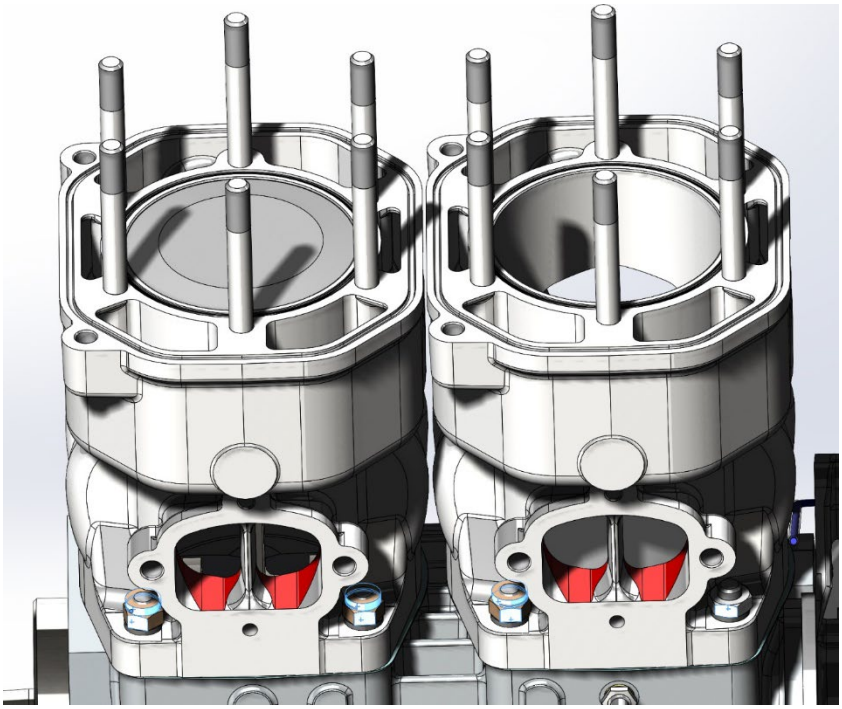

Figure 32: Remove Cylinder

9.6 Remove of Piston, Piston Bolt and Bearing

Applicable variants: All

Perform all steps as described in Section 10.5

Step	Task	Tool	Perf
1	Remove the inner snap ring	flat head screw driver	
2	Remove the wrist pin by hand		
3	Remove the piston		
4	Remove the bearing		

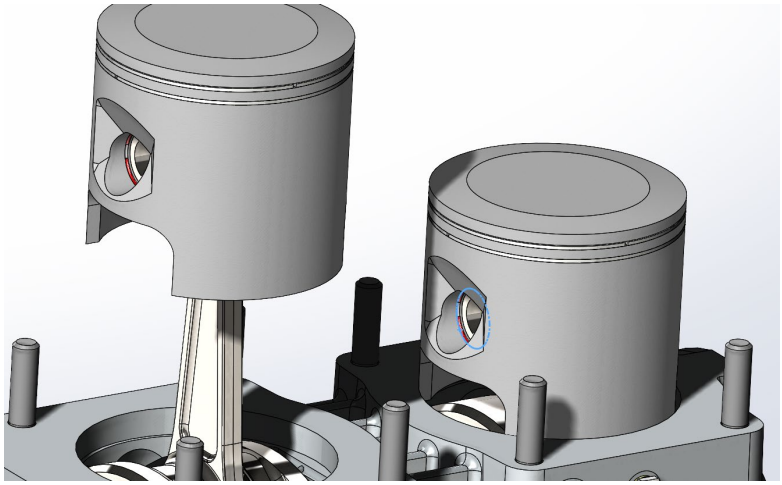

Figure 33: removal of piston

9.7 Installation of Piston, Piston Bolt and Bearing

Applicable variants: All

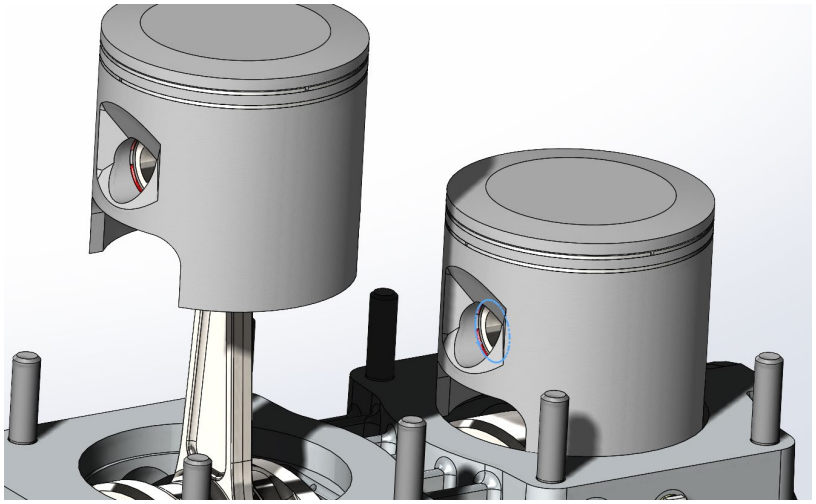

Figure 34: removal of piston

The piston direction is very important, the piston direction is marked with an arrow, which must show into the exhaust direction.

If case the piston direction indication cannot be identified. The piston rings are split and secured by a small notch. This notch must point towards the intake.

Step	Task	Tool	Perf
1	Lubricate the needle bearing with two stroke oil	2 Stroke Oil	
2	Install the bearing into the connection rod		
3	Install the inner snap ring	Snap ring tool	
4	Install the wrist pin into the piston by hand, align the in at the inner edge of the post		
5	Install the piston onto the connection rod by		
6	Install the outer snap ring	Snap ring tool	

WARNING
During installation, ensure that the piston rings are properly secured against rotation, the ring can stop at the outlet port otherwise. As result, a significant damage to the engine will occur, as well as a sudden stop.

WARNING
Ensure that the piston snap ring is properly installed. If not a significant damage to the engine can occur, as well as a sudden stop.

9.8 Installation of Cylinder

Applicable variants: All

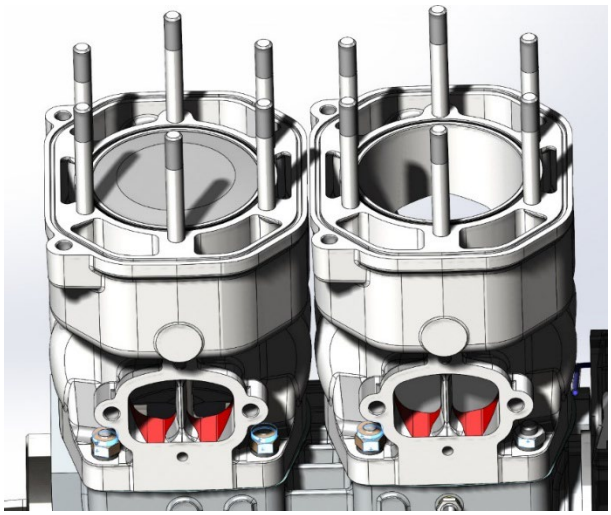

Figure 35 Cylinder installation

Ensure that all steps iaw. Section 10.7 have properly performed, if pistons have been removed.

Step	Task	Tool	Perf
1	Install a new cylinder base gasket		
2	Apply 2 stroke oil to cylinder and piston	2 stroke oil	
3	Compress piston rings	Piston ring spanner	
4	Align piston and cylinder		
5	Insert piston into cylinder		
6	Secure cylinder by installing tarmac nuts and washer	Wrench no. 12	
7	Perform installation of second cylinder, using steps 1–6, if necessary		
8	Align the cylinder prior final tightening the thermak nuts using the cylinder alignment tool installed at the cylinder outlet	Cylinder alignment tool	
9	Tighten thermak nuts to 24 Nm using torque wrench	Torque wrench with size no 12	
10	Install the 12 thread studs for the cylinder heads	Stud installation tool	

WARNING
During installation of the piston rings, ensure that the ring, piston nor cylinder got damaged. Not properly installed piston, ring or cylinder can end in a unexpected engine stop.

9.9 Installation of Cylinder heads

Applicable variants: All

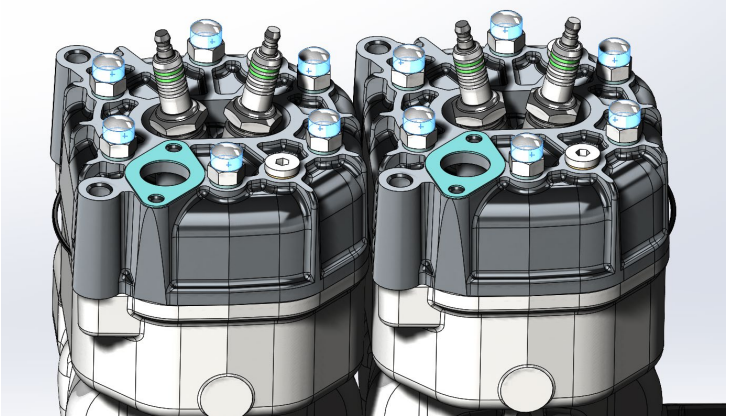

Figure 36 - cylinder heads

Ensure that all steps in Section 10.8 have properly performed, if cylinder have been removed.

Step	Task	Tool	Perf
1	Install the two cylinder O-Rings		
2	Install the two cylinder heads		
3	Install 12 washers		
4	Install 12 head nuts and torque to 24 Nm	Torque wrench with size no 12	

9.10 Throttle Body Installation

In case access to the engine intake was required, perform the following steps to install the throttle body:

Step	Operation	Tools, aid	Check
1a	Install new throttle body onto the rubber sockets		
2a	For new throttle body: Tighten clamps marked in blue	Screwdriver, Wrench Size 6 - 7	
3	Install engine from mounting frame as described at the aircraft maintenance manual (incl. Waterbridge, Exhaust)	Tools per Aircraft Maintenance Manual	
4	Reconnect the Throttle linkage	Small screw driver	
5	Reconnect all fuel lines from the system	Wrench	
6	Reconnect Throttle Position sensor	Not needed	
7	Reconnect the fuel injector wires	Not needed	

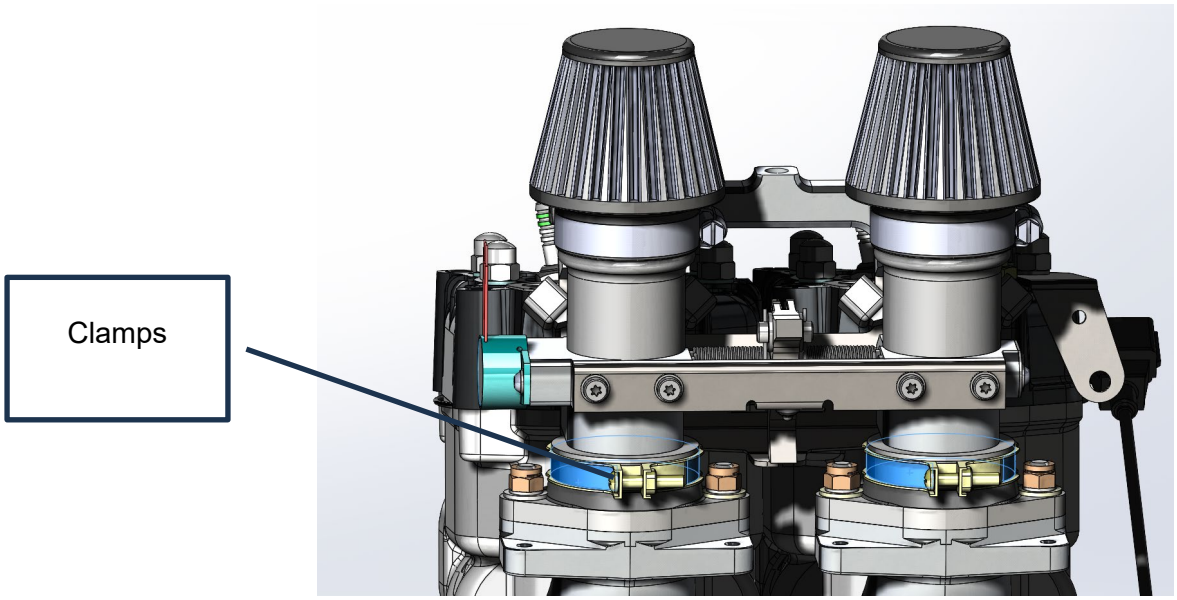

Figure 37: Remove throttle body–NEW throttle body version

Step	Operation	Tools, aid	Check
1b	Install hex nuts or allen screws	Wrench or allen wrench	
2b	Install old throttle body from the rubber sockets		
3	Install the emergency fue lines (from injectors at the rear end)	Sharp knife, side cutter for safety wire	
4	Install engine from mounting frame as described at the aircraft maintenance manual (incl. Waterbridge, Exhaust)	Tools per Aircraft Maintenance Manual	
5	Reconnect the Throttle linkage	Small screw driver	
6	Reconnect all fuel lines from the system	Wrench	
7	Reconnect Throttle Position sensor	Not needed	
8	Reconnect the fuel injector wires	Not needed	

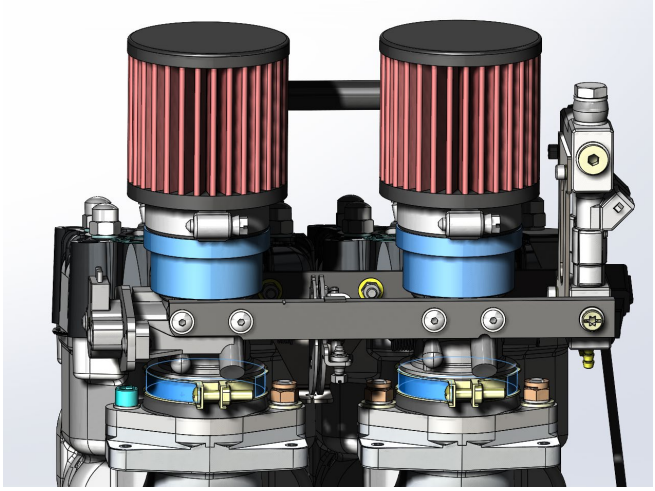

Figure 38: Remove old throttle body

Step	Operation	Tools, aid	Check
1c	Install carburettors onto the engine		
2c	Install hex nuts or allen screws	Wrench or allen wrench	
3	Install fuel lines	Sharp knife, side cutter for safety wire	
4	Install engine from mounting frame as described at the aircraft maintenance manual (incl. Waterbridge, Exhaust)	Tools per Aircraft Maintenance Manual	
5	Reconnect the Throttle linkage	Small screw driver	
6	Reconnect all fuel lines from the system	Wrench	
7	Reconnect Throttle Position sensor	Not needed	
8	Reconnect the fuel injector wires	Not needed	

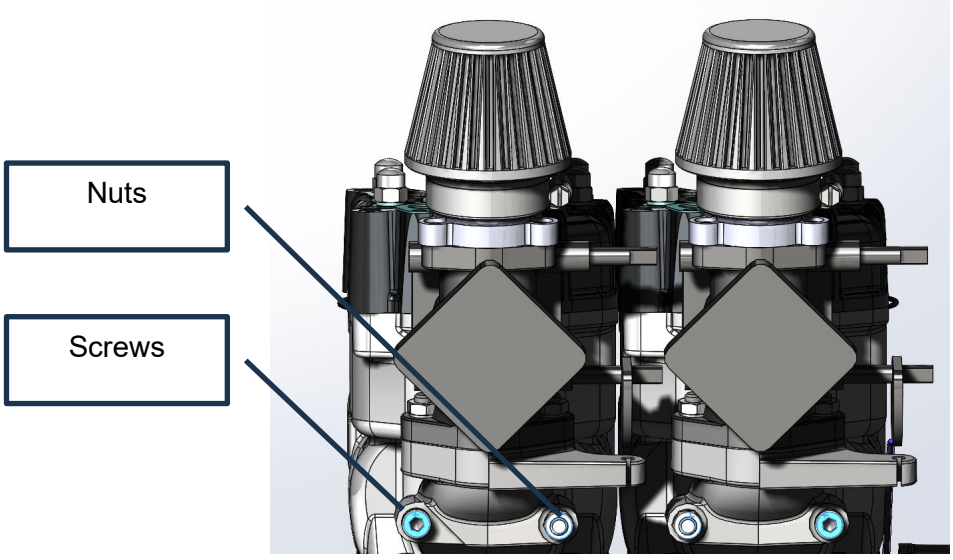

Figure 39: Remove carburettor version

9.11 Air filter cleaning

Applicable variants: All

Remove the air filter from the intake by loosening the clamps.

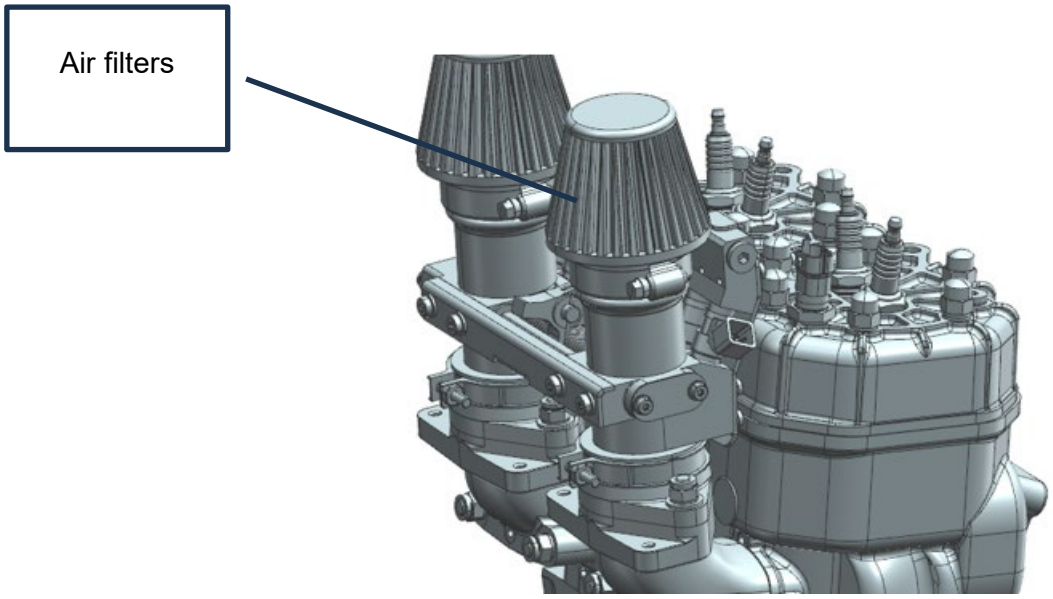

Use K&N Air filter cleaner to clean the air filter, rinse the air filter with water so remove all dirt and debris. Let the air filter dry for 24h and oil the air filter using air filter oil mentioned at 13.2.

CAUTION
The air filter must be oiled, prior usage. The oil either has a red or green colour; the base material has a grey colour. A clear not pre oiled air filter can be determined by colour. The usage of with any kind or heat gun or hair dryer to dry the air filter is prohibited!.

ENVIROMENTAL NOTE
Gear oil may cause skin and serious eye irritation. Harmful if swallowed and may be fatal if it enters the airways. Avoid release to the environment, as it is harmful to aquatic organisms. Use appropriate protective equipment and dispose of used oil in accordance with applicable regulations.

9.12 Removal of alternator rotor

Applicable variants: All

Step	Task	Tool	Perf
1a	For injection system: Remove RPM sensor	Allen key no. 6 or wrench no 22	
1b	For carburettor version: Remove pick up for ignition coils	Allen Key no. 5	
2	Remove screw for rotor (independent from system)	Wrench Size 19, Tool for Rotor fixation	
3	Remove Rotor	Puller for Rotor	

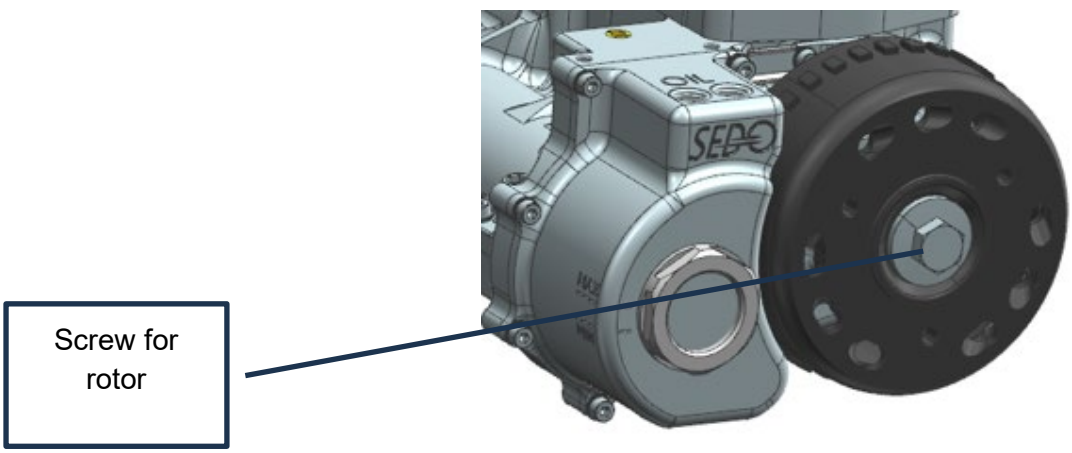

Figure 40: Removal rotor

9.13 Removal of alternator stator

Applicable variants: All

Step	Task	Tool	Perf
1	remove the stator by removing the screws	Allen key no. 5 or wrench #10	
2	remove the bracket of the stator	Allen key no. 5 / Screw driver	
3	Disconnect wires		

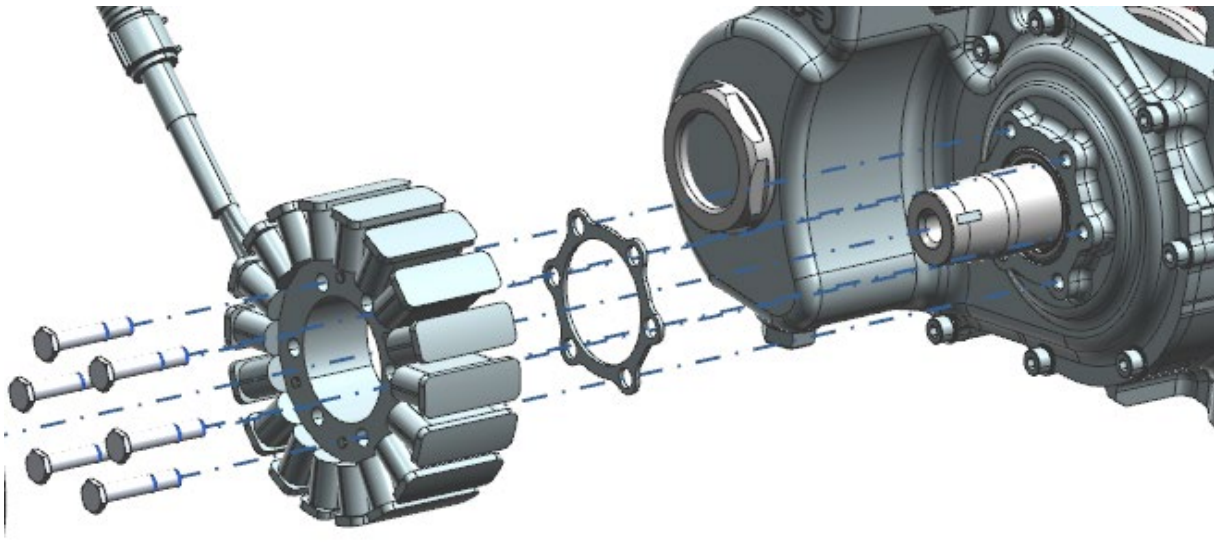

Figure 41: Removal of the stator

9.14 Installation of alternator rotor

Applicable variants: All

Ensure that all steps of 0 have been performed:

Step	Task	Tool	Perf
1	Put rotor into place		
2	Install screw for rotor and torque it properly (independent from system)	Wrench Size 19, Tool for Rotor fixation	
3a	For injection system: Install RPM sensor	Allen key no. 6 or wrench no 22	
3b	For carburettor version: Install pick up for ignition coils	Allen Key no. 5	

9.15 Installation of alternator stator

Applicable variants: All

Step	Task	Tool	Perf
1	Install the bracket of the stator	Allen key no. 5	
2	Place stator in position		
3	Install stator by installing the bolts	Allen key no. 5	
4	Connect wires		

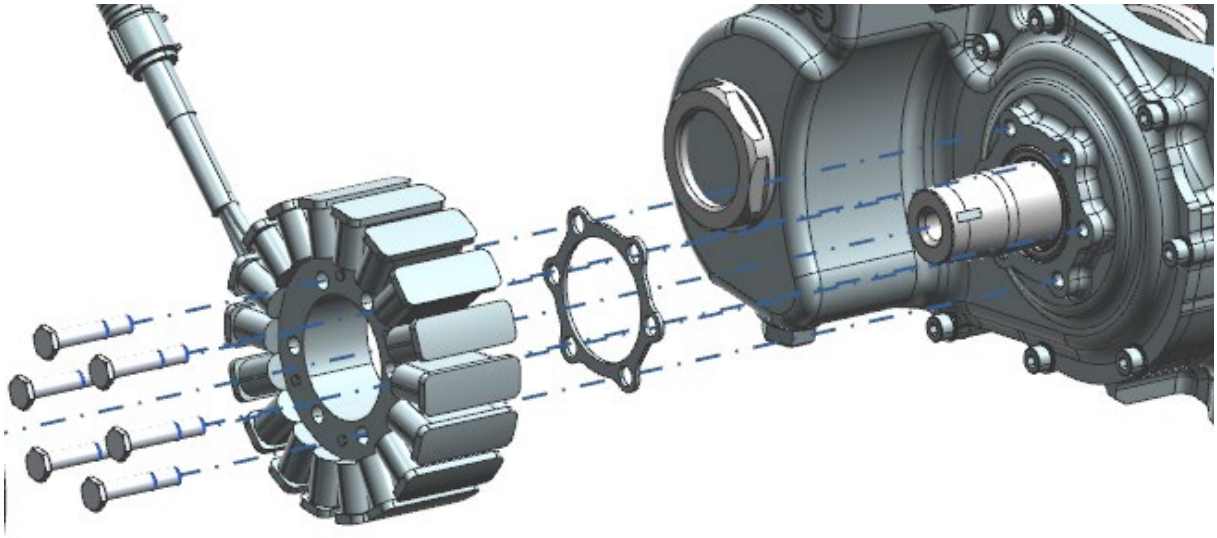

Figure 42: Removal of the stator

9.16 RPM sensor

Applicable variants: All

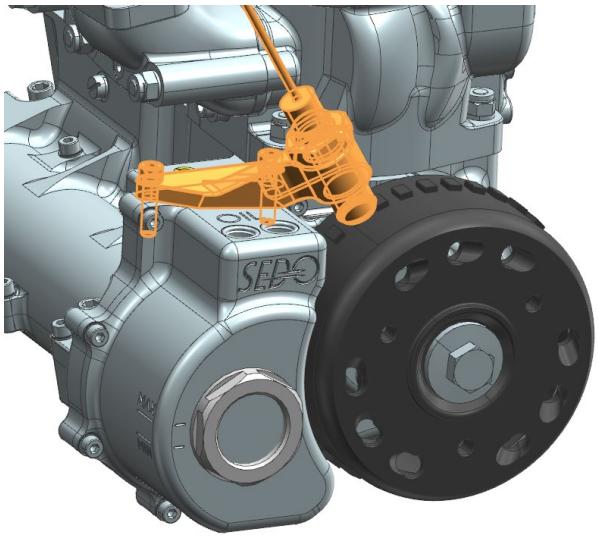

Figure 43 Speed sensor on SEDU version

The air gap between the sensor head and the studs on the rotor of the generator must be 0.5 ±0.1 mm. This has to be checked with a feeler gauge after mounting the speed sensor.

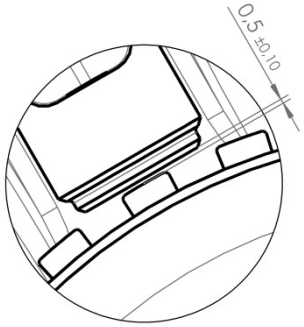

Figure 44 Clearance between RPM sensor and Rotor

The sensor is either installed using 2 screws, which should be torqued to their corresponding torque value or using on big nut, which should be torqued to 20Nm maximum.

9.17 Throttle Position sensor

Applicable variants: 2625–0x i, 2625–0x is, 2625–0x in, 2625–0x ns

Gain access to the serial port of the Engine Control Unit and connect the software available from SOLO to the ECU, using a laptop and a serial cable. Refer to chapter 6 and following for more information.

Validate that the values of the throttle butterfly (“Drosselklappe”) are between min of 0° and max. of 89.9°

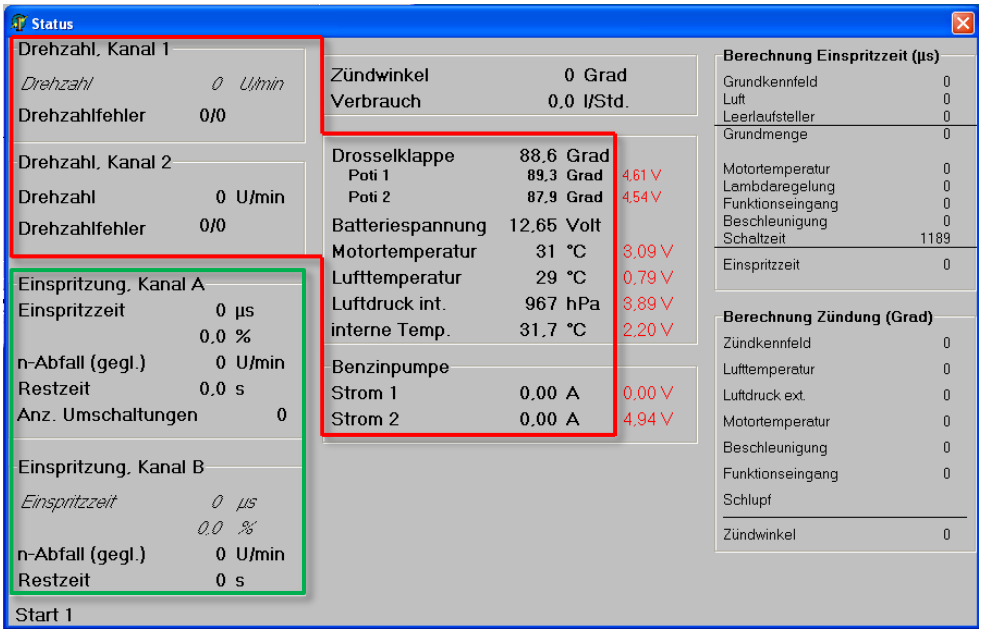

Figure 45 - Trijeckt ECU data

If the values are out of range, loosen the two screws of the throttle position sensor and move the sensor to an appropriate position and retighten the screws using Loctite as per Parts List.

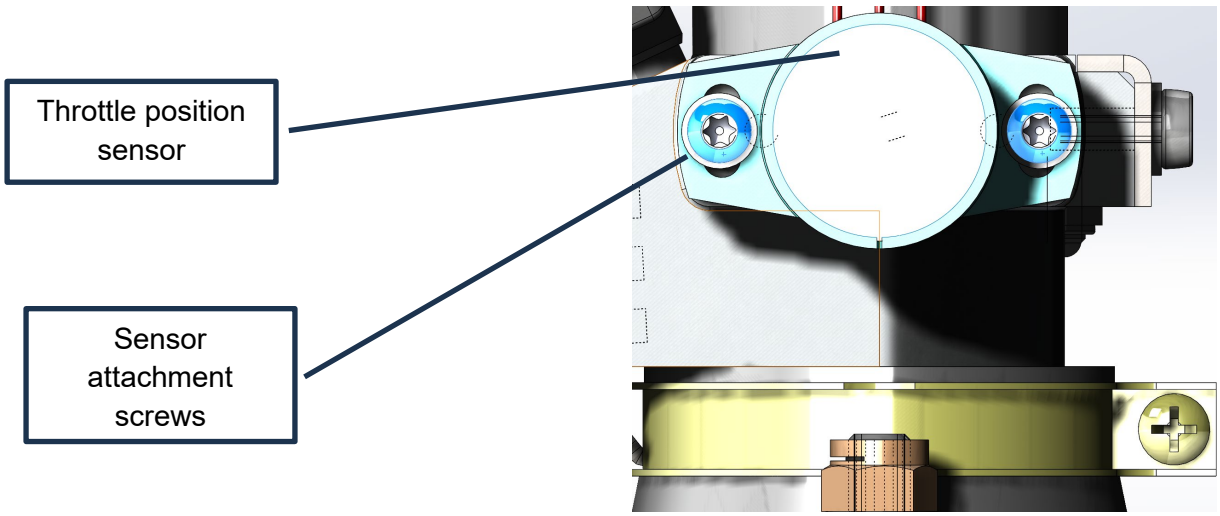

Figure 46 - Throttle positions sensor (TPS)

Perform a travel test, by moving the throttle from idle to full throttle, if during the test, the sensor reading of 90° or 0° occur, the sensor must be realigned. If a realignment is not possible, the sensor is broken and must be replaced.

9.18 Air Sensor

Applicable variants: 2625–0x i, 2625–0x is, 2625–0x in, 2625–0x ns

The air temperature sensor is a small sensor installed within or adjacent to the throttle-body air intake and secured with heat-shrink tubing.

If damage or malfunction of the air temperature sensor is suspected, its resistance can be checked using an ohmmeter. The measured resistance shall be compared with the values specified in the following table to verify correct sensor operation:

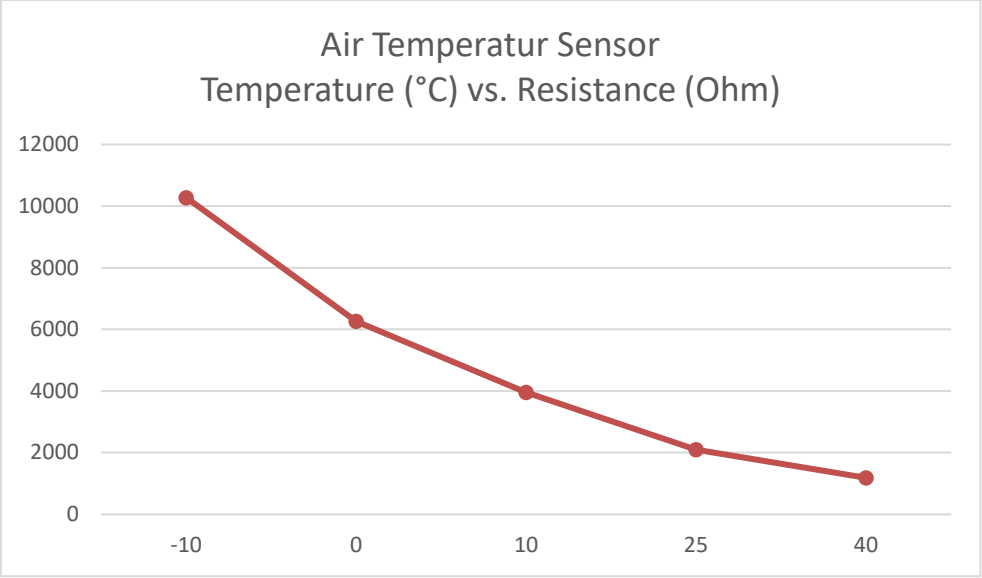

Figure 47: Resistance of the air sensor

9.19 Water Sensor

Applicable variants: All

The coolant temperature sensor is installed in the cylinder head and is connected via a two-pin quick connector.

If damage or malfunction of the coolant temperature sensor is suspected, its resistance can be checked using an ohmmeter. The measured resistance shall be compared with the values specified in the following table to verify correct sensor operation.:

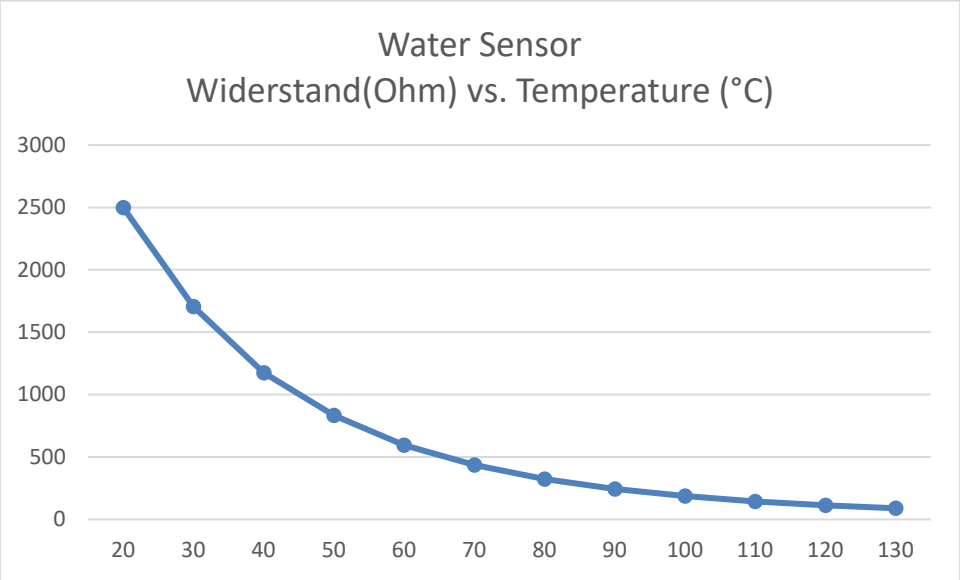

Figure 48: Resistance of the water sensor

The unit can be removed from the head by using a standard wrench.

During installation, ensure that a new gasket will be used. The unit should be torqued to 24 Nm maximum.

10. Troubleshooting and Corrective Actions

This section provides procedures and guidance for identifying, diagnosing and rectifying engine malfunctions. Troubleshooting shall be performed systematically, beginning with the identification of the reported fault and inspection of the relevant engine systems and components.

Where applicable, the ECU fault memory and recorded operating data should be reviewed before commencing component replacement or corrective action. All identified faults shall be investigated to determine the underlying cause before the engine is returned to service.

Maintenance and corrective actions shall be performed in accordance with the procedures and limitations specified in this Service Manual and the applicable aircraft maintenance documentation.

10.1 Engine not starting – Fuel injection system

If the engine does not start, perform the following checks in the order given. Before commencing troubleshooting, ensure that the aircraft is secured against unintended movement and that all applicable safety precautions are observed.

1	Check battery voltage	Verify that the battery voltage is within the limits specified for the aircraft and engine installation.
2	Check the fuel supply	Verify that sufficient fuel is available and that the fuel shut-off valve is open. Check the fuel pressure and fuel flow in accordance with Section 4.1.1
3	Check ECU power supply	Verify that the ECU receives the required electrical supply during engine cranking
4	Check engine compression	Switch the ignition OFF and prevent fuel injection. Turn the engine by hand and check for compression on both cylinders. Investigate any significant difference or loss of compression
5	Check the starter system	Verify that the starter motor turns the engine at sufficient speed for the ECU to detect engine speed and for the ignition and fuel-injection systems to operate correctly.
6	Check for engine flooding	If the engine is suspected to be flooded, follow the applicable engine de-flooding procedure. Where permitted by the aircraft installation, temporarily close the fuel shut off valve, set the throttle to the specified position and crank the engine until the excess fuel has been cleared, or the engine starts to fire
7	Check the ECU using Win.	Connect the diagnostic computer and monitor the Win status window during engine cranking: Engine speed shall be displayed when the engine is turned by the starter. If no engine speed is detected, inspect the RPM/crankshaft-position sensor, wiring and associated connections.

		Verify operation of the fuel pumps by monitoring their current consumption. Compare the measured values with the applicable limits.
8	Check the ignition system	Inspect the ignition system, ignition drivers, ignition coils, spark plugs and associated wiring for defects, loose connections or damage. Verify ignition operation using the applicable ignition-system test procedure.
9	Check the fuel injectors	Verify that the fuel injectors operate correctly and that fuel injection occurs during engine cranking. Check the injector supply, wiring and ECU control signals as applicable.

If no fault is identified after completing the above checks, read and record the ECU fault memory and operating data and contact SOLO Aircraft Engines for further troubleshooting instructions.

10.2 Engine Running Hot / Suspected Lean Operation

If the engine operates at an abnormally high cylinder-head or coolant temperature, or if the engine is suspected of operating with a lean fuel-air mixture, perform the following checks.

CAUTION
Continued operation with excessive engine temperature or a confirmed lean condition may result in engine damage.

1	Check fuel-oil mixture.	An incorrect mixture can affect engine operation and combustion temperatures.
2	Check EGT values	Verify the EGT indication during engine operation and compare the measured values with the applicable operating limits. Check for abnormal differences between the cylinders.
	Check spark plugs	Run the engine for approximately 60 at full power and shut down. Remove spark plugs and observed colour. A very light or unusually clean appearance may indicate abnormal combustion or a lean operating condition. Compare the condition of both cylinders.
3	Check fuel supply	Verify that the fuel supply system is free from restrictions and that sufficient fuel is available.
4	Fuel-injected engines – check fuel rail pressure	Verify that the fuel rail pressure is within the specified limits during engine operation. Check for pressure fluctuations or a reduction in pressure under increased engine load.
5	Check carburettor adjustment.	For carburetted engines, verify the correct carburettor adjustment and inspect the applicable jets, needles and fuel passages for contamination or blockage.

6	Check for air leakage	Inspect the intake system and connections for uncontrolled air entering the engine downstream of the fuel-metering system. An intake air leak can result in a lean fuel-air mixture and increased EGT.
7	Check ignition timing	Verify that the ignition timing is correctly set for the applicable engine and ignition-system configuration
8	Exhaust verification	The exhaust system shall be inspected for cracks, leakage, discolouration and other signs of overheating or damage.
9	Check drive belt system	The temperature can rise due to defects at the belt / bearing support of the belt or propeller bearing. Do also verify that there is no problem with the propeller.

If the EGT remains abnormally high after these checks, discontinue engine operation and investigate the cause before further operation.

10.3 Exceeding maximum temperature limits

Applicable variants: All

Engine temperature > 115°C EGT > 650°C	If the engine has overheated and the coolant temperature has exceeded **115 °C** or the EGT has exceeded **650°C**, the engine compression and static RPM shall be checked by the operator after the engine has cooled down. If reduced compression is suspected or a loss of engine power is observed, the engine shall be inspected by SOLO Aircraft Engines GmbH before further operation. The owner shall ensure that any occurrence of engine overheating is reported to SOLO Aircraft Engines GmbH.
Engine temperature (°C) > 125°C EGT > 675°C	If the engine has overheated and the coolant temperature has exceeded **125 °C** or the EGT has exceeded **675°C**, the engine shall be inspected by SOLO Aircraft Engines GmbH before further operation. The owner shall ensure that any occurrence of engine overheating is reported to SOLO Aircraft Engines GmbH.

NOTICE
The ECU stores error messages in the fault memory only when engine speed is detected.

10.4 High Coolant Temperature

If the coolant temperature exceeds the normal operating range, perform the following checks:

1	Monitor coolant temperature	Verify the indicated coolant temperature and confirm that the temperature sensor and indication system are functioning correctly.
2	Check coolant level	Verify that the coolant level is correct and inspect the system for signs of coolant leakage.
3	Check coolant circulation	Verify that the coolant pump and associated hoses and connections are functioning correctly and that adequate coolant circulation is maintained
4	Check radiator and airflow	Inspect the radiator for blockage, contamination or damage. Verify that sufficient airflow through the radiator is available during engine operation.
5	Check for air in the cooling system	Verify that the cooling system has been correctly filled and bled and that no significant air pockets are present.
6	Check engine operating conditions	Verify that the engine has not been operated outside the applicable RPM, power or temperature limitations.
7	Verify fuel pressure	An excessively lean fuel-air mixture can result in increased engine and exhaust-gas temperatures. Low fuel pressure may result in a lean fuel-air mixture and shall therefore be investigated if a lean operating condition is suspected.
8	Exhaust verification	The exhaust system shall be inspected for cracks, leakage, discolouration and other signs of overheating or damage.
9	Check drive belt system	The temperature can rise due to defects at the belt / bearing support of the belt or propeller bearing. Do also verify that there is no problem with the propeller.

CAUTION
If the coolant temperature approaches **115 °C**, reduce engine power and take appropriate action to reduce the coolant temperature. Do not continue engine operation if the coolant temperature continues to rise or approaches the maximum permitted temperature.

NOTICE
During ground operation, the airflow through the radiator may be significantly lower than during flight. Ground testing at high engine power can therefore result in elevated coolant temperatures even when the cooling system is functioning correctly. Particular care shall be taken when operating the engine at high power on the ground, and coolant temperature shall be continuously monitored.

If the coolant temperature remains excessive after these checks, discontinue engine operation and investigate the cause before further operation.

10.5 Engine does not achieve full power or power drops

If the engine does not achieve the expected power or a loss of power occurs during operation, perform the following checks:

1	Check throttle valve opening	Verify that the throttle valves open fully when the throttle control is in the full-power position. Check the throttle mechanism, cable adjustment and mechanical limit stop.
2	Check engine compression	Switch the ignition **OFF** and turn the engine by hand. Check the compression of both cylinders and investigate any significant difference or loss of compression
3	Check the ignition system	Perform the tests to test the ignition coils individually. Inspect the ignition system, ignition coils, spark plugs and associated wiring for defects or loose connections. Perform the applicable ignition-system test at idle speed and observe the engine speed for an abnormal change
4	Check the fuel-injection system	Run the engine for at least **30 seconds** to allow the engine-control system to perform its automatic monitoring of the fuel-injection system. Subsequently, read out the ECU fault memory and recorded system information using the applicable diagnostic equipment. Investigate any recorded injector or fuel-system faults
5	Check fuel pressure	For fuel-injected engines, verify that the fuel pressure at the fuel distributor remains within the specified limits during engine operation, particularly at high power. Check the fuel pumps, filters, pressure regulator and fuel lines if the pressure is outside the specified range
6	Check the air filters	Inspect the air filters for contamination or blockage. Clean or replace the filters as required

If the engine still does not achieve full power after these checks, discontinue further operation until the cause of the power loss has been identified

10.6 Wire failures

Engine malfunctions may be caused by faults or defects in the electrical wiring and connections. Wiring faults can result from damaged or chafed cables, loose or corroded connections, inadequate grounding, incorrect wiring, or deterioration caused by engine vibration.

Continuous exposure to engine vibration can cause connectors to loosen, terminals to deteriorate, or wires to fatigue and break, particularly where wiring is inadequately supported or routed.

Electrical wiring, connectors and connections should therefore be inspected as part of the initial troubleshooting procedure when an engine malfunction or abnormal system behaviour is reported.

10.7 Altenator / charge regulator defect

The alternator or charge regulator may be considered defective if one or more of the following conditions occur:

1. The charge warning LED is illuminated, if fitted by the airframe manufacturer.
2. The battery voltage during engine operation is below 12.8 V and continues to decrease.

If an alternator or charge-regulator defect is indicated:

3. Check the alternator wiring, connectors and ground connections for damage, looseness or corrosion.
4. Check the alternator drive and mechanical attachment for correct condition and security.
5. Check the charge-regulator wiring, connectors and fuse for correct condition and security.
6. Check the battery voltage with the engine stopped and compare it with the applicable battery specification.
7. With the engine running, measure the charging voltage and verify that the alternator provides the specified output.
8. If the wiring, connections and fuses are serviceable but the charging voltage remains below the specified value, the alternator or charge regulator shall be replaced or referred to an approved maintenance organisation for further investigation.

10.8 ECU Engine Status Check

Applicable variants: 2625–0x i, 2625–0x is, 2625–0x in, 2625–0x ns

The ECU status and stored fault memory can be accessed using a computer running **Win NEO** and an **RS-232 serial connection cable**.

When the computer is correctly connected and the ECU is powered, Win NEO automatically establishes communication with the ECU.
ECU status information and stored fault memory can be viewed without a password. Functions that modify ECU settings or delete stored fault information are password-protected and may only be performed by authorised personnel.

When Win NEO is started, the **Status** window opens automatically. With the ECU powered and connected to the computer, the Status window provides information on the current operating condition of the engine control system, including:

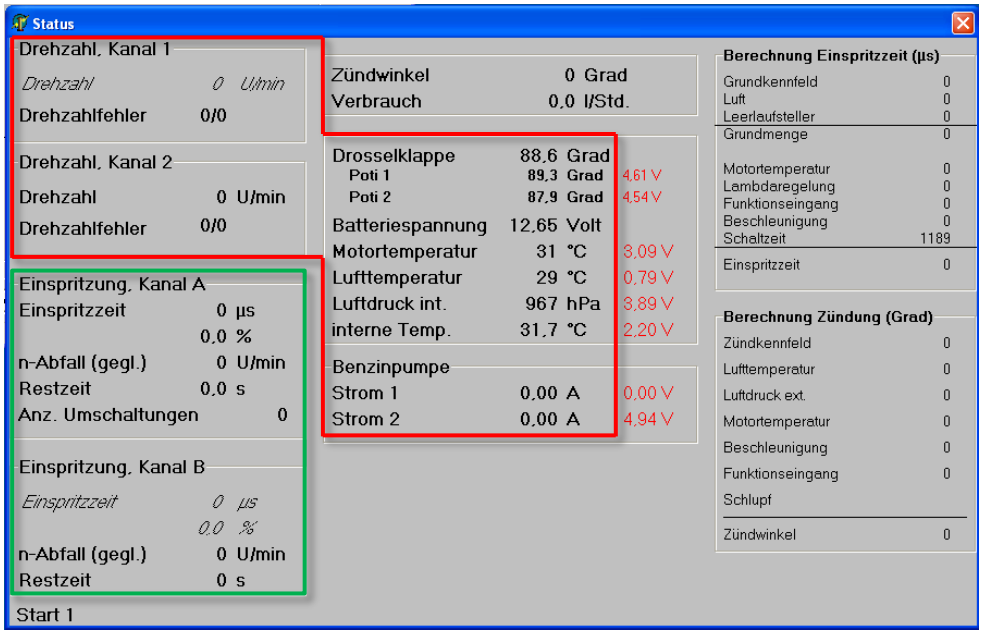

10.8.1 Sensor Values

The following sensor values are displayed in the ECU status window and are highlighted in red when a fault is detected:

- **RPM:** The speed of the passive (non-primary) channel is displayed in italics. If a speed fault is detected, the speed value of the affected channel is displayed in red for the duration of the fault. Individual speed errors during engine starting or shutdown are normal and do not require corrective action. If the number of speed errors increases during starting or engine operation, inspect the applicable inductive RPM sensor and its wiring.

- **Fuel pump current:** If the fuel-pump current is outside the expected range, the corresponding value is displayed in red.
- **Throttle valve:** If the signal from either potentiometer channel is faulty, the corresponding value is displayed in red for the duration of the fault. The signal voltages are always displayed in red and do not by themselves indicate a fault. At idle, the throttle opening angle should be approximately **10°**. At full throttle, the throttle opening angle should be 87–89°.
- **Engine temperature, air temperature and air pressure:** If the signal from a sensor is faulty, the corresponding value is displayed in red for the duration of the fault. The signal voltages are always displayed in red and do not by themselves indicate a fault. If a sensor fault is suspected, the applicable temperature or pressure value may be verified using a suitable calibrated measuring instrument.

10.8.2 Injection Values

The ECU status window displays the following injection parameters:

- Injection time / nozzle opening time
- Engine speed drop
- Remaining time of the active injection channel until the next channel changeover

The injection time of the non-active injection channel is displayed in italics.

10.9 ECU Fault Memory – Reading and Diagnosis

Applicable variants: 2625–0x i, 2625–0x is, 2625–0x in, 2625–0x ns

If the cause of an engine malfunction cannot be identified by the applicable troubleshooting procedure, the ECU fault memory shall be read as part of the fault-finding process.

After establishing communication with the ECU, select **Error** → **Show Error** in the Win NEO main window. Select **Reload** in the error window to retrieve the current fault information stored in the ECU. The stored fault information will then be displayed.

The fault memory provides information on faults detected by the ECU and shall be used together with the applicable troubleshooting procedures. A stored fault indication does not necessarily identify the root cause of the malfunction. The associated sensor, actuator, wiring, connectors and power supply shall be checked as applicable.

Following corrective action, the fault memory shall be read again to confirm whether the fault remains present. The engine shall not be returned to service until any fault affecting safe engine operation has been identified and corrected.

10.10 Sensors errors

Applicable variants: All

If a sensor fault occurs repeatedly or persists for an extended period, the applicable sensor, wiring and connections shall be inspected and the fault investigated.

1. Read the ECU fault memory and identify the affected sensor.
2. Inspect the sensor for physical damage, contamination, loose mounting or incorrect installation.
3. Inspect the sensor connector and wiring for loose connections, damaged insulation, corrosion or poor contact.
4. Check the sensor supply voltage and ground connection.
5. Check the sensor signal and compare the measured value with the expected value for the applicable operating condition.
6. Where applicable, check the sensor resistance using a calibrated ohmmeter and compare the result with the specified sensor characteristic.
7. If the sensor, wiring and connections are serviceable but the fault remains present, replace the affected sensor and repeat the functional check.
8. After corrective action, clear or reset the applicable fault indication and verify correct sensor operation with the engine running, where required.

The following checks shall be performed where applicable:

Error Message	Task
Air pressure sensor defective	Contact SOLO
Engine temperature defective	Check engine temperature sensor and wiring with multimeter. The sensor has a resistance of 2351 to 2648 Ohm at 20°C.
Air temperature defective	Check air temperature sensor and wiring with multimeter. The sensor has a resistance of 2520 to 2584 Ohm at 20°C.
Throttle valve potentiometer 1 defective	– Check throttle valve sensor and wiring with multimeter. Note: The sensor contains two electrically independent 3k Ohm potentiometers. Pins 1-3 on the sensor connector belong to the first potentiometer, pins 4-6 to the second. Pins 2 and 5 are connected to the wipers. – Check that the angle sensor is correctly aligned or adjusted. The values displayed in the Win status window serve as an aid.
Throttle valve potentiometer 2 defective	
RPM detection channel 1 defective	

RPM detection channel 2 defective	Check speed sensor and wiring with multimeter. At the plug at the sensor the resistance between pin 5 and 6 should be approx. 600 Ohm and between pin 1 and 2 approx. 900 Ohm.

NOTICE
Brief and infrequent sensor disturbances lasting only a few milliseconds are generally not critical and do not require corrective action. In particular, individual speed-sensor errors during engine start or shutdown are considered normal..

10.11 Injection system

Applicable variants: 2625–0x i, 2625–0x is, 2625–0x in, 2625–0x ns

Error Message	Task
Fuel pump 1 defective	• Temporary, irrelevant fault messages concerning the fuel pumps can occur when the tank is (almost) empty. • In unclear cases: During engine operation, observe the current consumption of the corresponding pump via Win. Perform a control measurement with a multimeter. If there is no measurement error, proceed as follows: • Current consumption is OK again (the values in the status window are black during operation): no action required, if the error message does not occur again. • Current consumption 0A: Check wiring and fuse. • Current consumption >0A, but too high or too low (the value in the status window is red): Check fuel pump.
Fuel pump 2 defective	
Injection bench 1 defective	Check injection valves of the channel A and wiring with multimeter. The resistance of one valve is approx. 12 Ohm.
Injection bench 2 defective	Check injection valves of the channel B and wiring with multimeter. The resistance of one valve is approx. 12 Ohm.

11. Engine Preservation and Storage

- If the engine will not be used for more than two months, it must be preserved. Remove the air filter and inject 2.5 ml of two-stroke oil into each intake openings of the throttle valve sockets and rotate the engine via the propeller approximately ten times.
- Ensure the inlet opening at the air filter is covered or air filter is reinstalled to prevent contamination.

12. Ordering of parts

Spare parts for the SOLO 2625-series engines shall be ordered directly from SOLO Aircraft Engines GmbH or through an authorised distributor, where applicable.

When ordering spare parts, the following information shall be provided to ensure correct identification and configuration of the required parts:

- Engine type and variant
- Engine serial number
- Aircraft type and aircraft serial number, where applicable
- Part number and description of the required part
- Quantity required
- Applicable modification or configuration information, where relevant
- Customer or maintenance organisation contact details

The applicable SOLO Parts-Price Catalogue shall be used to identify the required part number. SOLO provides separate parts catalogues for the 2625-02 and 2625–02 engine variants.

Parts shall be ordered using the current **SOLO Spare Parts Order Form**. The completed form shall include the part number, quantity and description of each required part and shall be signed and dated by the person placing the order.

For parts that are configuration-dependent, safety-critical, or subject to an applicable Service Bulletin or Technical Information, the engine serial number and complete engine configuration shall be provided to SOLO before ordering. SOLO may require additional information to confirm the correct replacement part.

Where a part is identified in the SOLO Parts Catalogue as being specific to an aircraft manufacturer or aircraft installation, the part shall be ordered through the applicable aircraft manufacturer or approved supplier rather than directly from SOLO.

If the required part cannot be identified from the applicable Parts Catalogue, the part shall not be ordered based solely on its physical appearance or an alternative part number. SOLO Aircraft Engines GmbH shall be contacted for confirmation of the correct part number.

Current SOLO contact details is provided in Section 1.2 and the applicable Spare Parts Order Form are available from the SOLO Aircraft Engines website

12.1 Core Engine Assembly

In the event of a crankshaft failure, or upon customer request, a **Core Engine Assembly** may be ordered from SOLO Aircraft Engines GmbH. The Core Engine Assembly includes:

- New crankcase
- New crankshaft
- Two new pistons
- Two new cylinders
- Two new cylinder heads
- New gaskets for:
    - Intake ports
    - Exhaust ports
    - Coolant outlets
    - Coolant inlets

The Core Engine Assembly is manufactured by SOLO Aircraft Engines GmbH. The **original engine serial number is assigned to the replacement Core Engine Assembly**, which is then supplied to an appropriately approved maintenance organisation for installation.

All accessories and aircraft-specific components are to be transferred from the original engine and installed on the Core Engine Assembly by the maintenance organisation, as applicable.

The engine identification plate bearing the original serial number, together with the replaced engine components, shall be returned to SOLO Aircraft Engines GmbH. **The Core Engine Assembly will not be released for shipment until the required identification plate and replaced components have been received by SOLO Aircraft Engines GmbH.**

Where, for logistical or financial reasons, only the identification plate can be returned, a signed declaration shall be provided confirming that the removed components have been permanently rendered unusable, for example by drilling or sawing, such that they cannot be reused as serviceable engine components. Refer to TM 4600 – 20 for further details.

.

12.2 Maintenance Consumables

For engine maintenance, the following approved consumables are specified:

Part nr No.	Description
SOLO 00 83 177	Air filter oil
Henkel 1335884	Loctite 243, blue
Henkel 1515357	Loctite 270, green
Henkel 234534	Loctite 574, orange
Henkel 1803365	Loctite 638, green
Henkel 1804416	Loctite 648, green
Wacker	Silicone Heat Conduction Compound

Tabel 14: List of consumables

APPENDIX 1 – Wiring diagrams

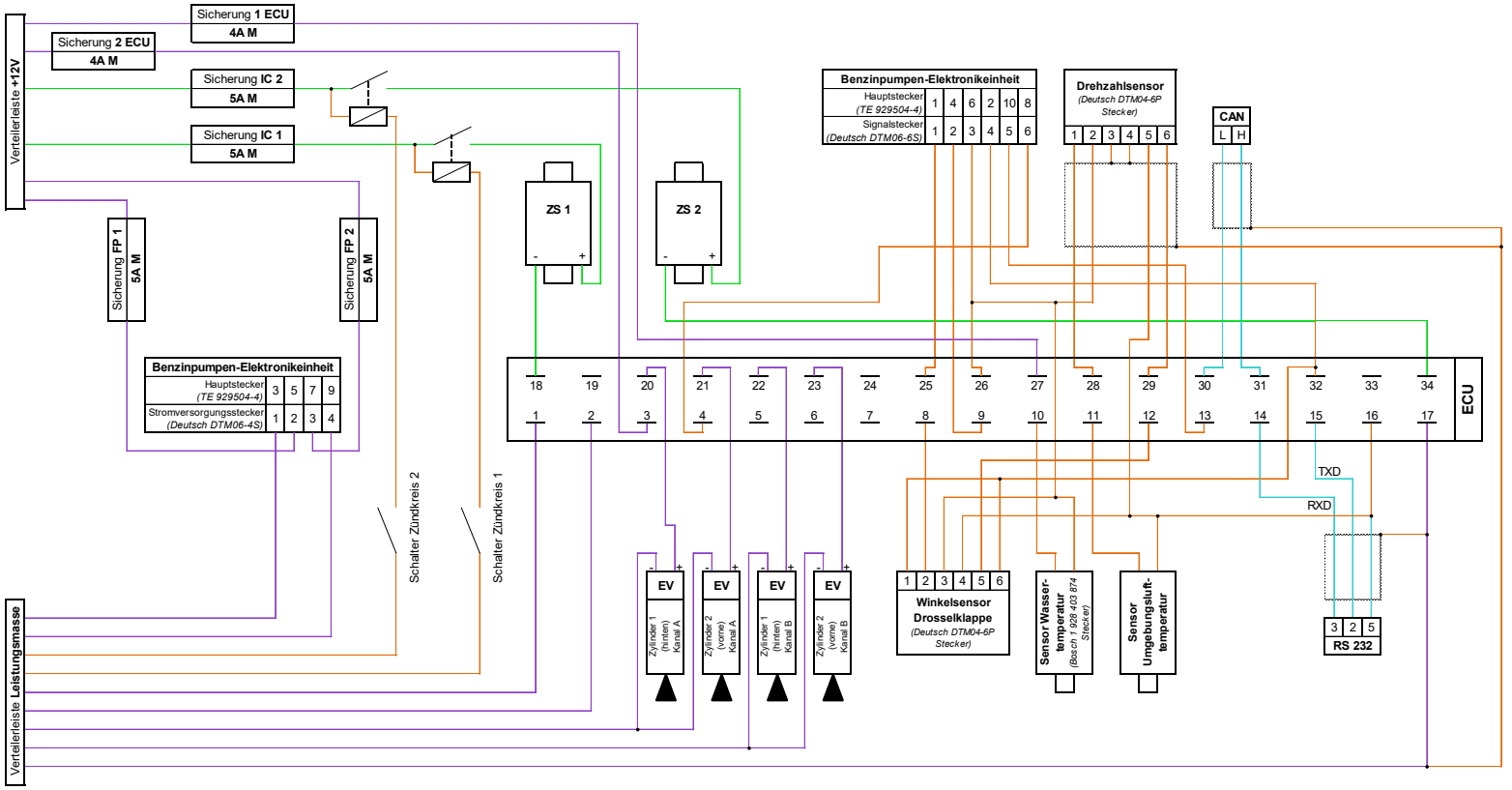

Anmerkungen:
- Alle Knotenpunkte müssen ausreichend vor Vibration geschützt sein.
- Falls anstelle der Solo Benzinversorgungseinheit andere Pumpen zum Einsatz kommen, müssen ggf. die Sicherungen FP1 und FP2, sowie die Kabelquerschnitte der Versorgungsleitungen, angepasst werden. (Sicherungen max. 7,5A mt)
- Solo empfiehlt für die Motorumgebung die Verwendung feinstdrähtiger, temperaturbeständiger Litze. (z.B. SiFF)
- Die Benzinpumpen-Elektronikeinheit ist sowohl mit einem PCB - Hauptstecker als auch mit zwei separaten, kabelgebundenen Steckern (Signal und Stromversorgungsstecker) erhältlich.

ECU (Trijekt bee) - Pinbelegung

1 *Leistungsmasse*	**11** *Lufttemp.*	**18** *Zündspule 1*	**27** *+ 12V*
2 *Leistungsmasse*	**12** *Signal DKS 2*	**20** *EV Zyl. 1, Kanal A*	**28** *Drehzahl Kanal 2*
3 *+ 12V*	**13** *Stromsignal P2*	**21** *EV Zyl. 2, Kanal A*	**29** *Drehzahl Kanal 1*
4 *Benzinpumpe P2*	**14** *RS 232 RXD*	**22** *EV Zyl. 1, Kanal B*	**30** *CAN L*
8 *Signal DKS 1*	**15** *RS 232 TXD*	**23** *EV Zyl. 2, Kanal B*	**31** *CAN H*
9 *Stromsignal P1*	**16** *Signalmasse 1*	**25** *Benzinpumpe P1*	**32** *+5V*
10 *Wassertemp.*	**17** *Leistungsmasse*	**26** *Signalmasse 2*	**34** *Zündspule 2*

empfohlene Kabelquerschnitte: (gemäß DIN VDE 0295: unterstrichen, US-Norm: kursiv)

- 0,35 mm² / *22 AWG*
- 0,5 mm² / *20 AWG*
- 1,0 mm² / *17 AWG* / *18 AWG*
- 1,5 mm² / *16 AWG* (1,5 mm² nicht für ECU-Stecker geeignet)

Fig 1: wire diagram control unit

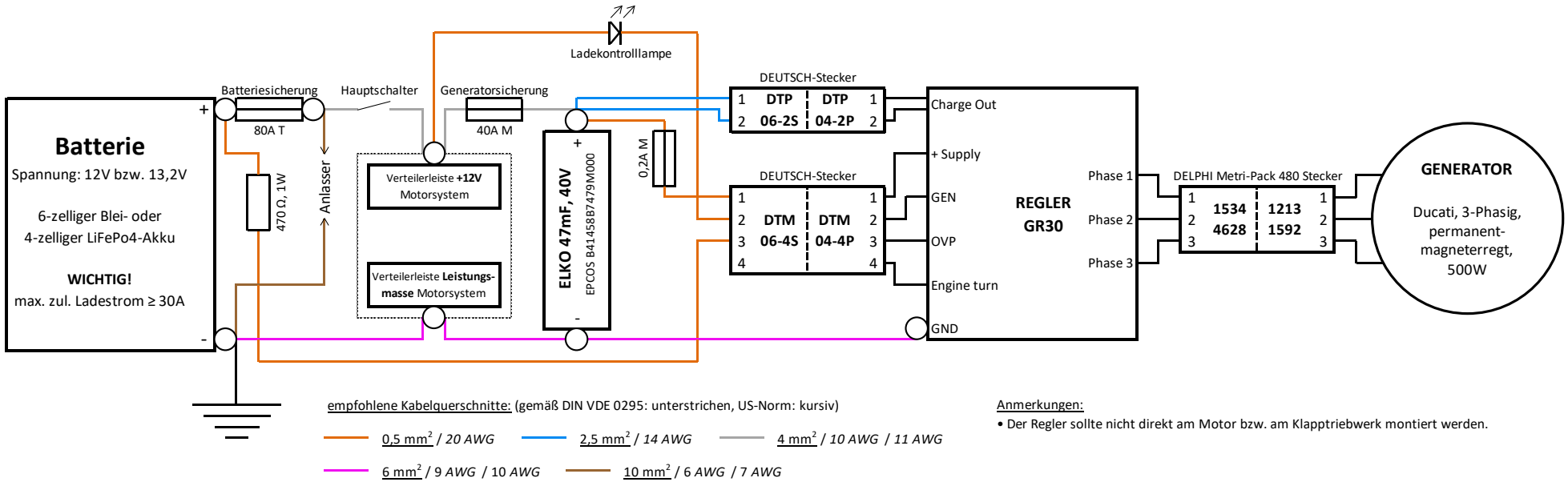

Fig 2: wire diagram generator

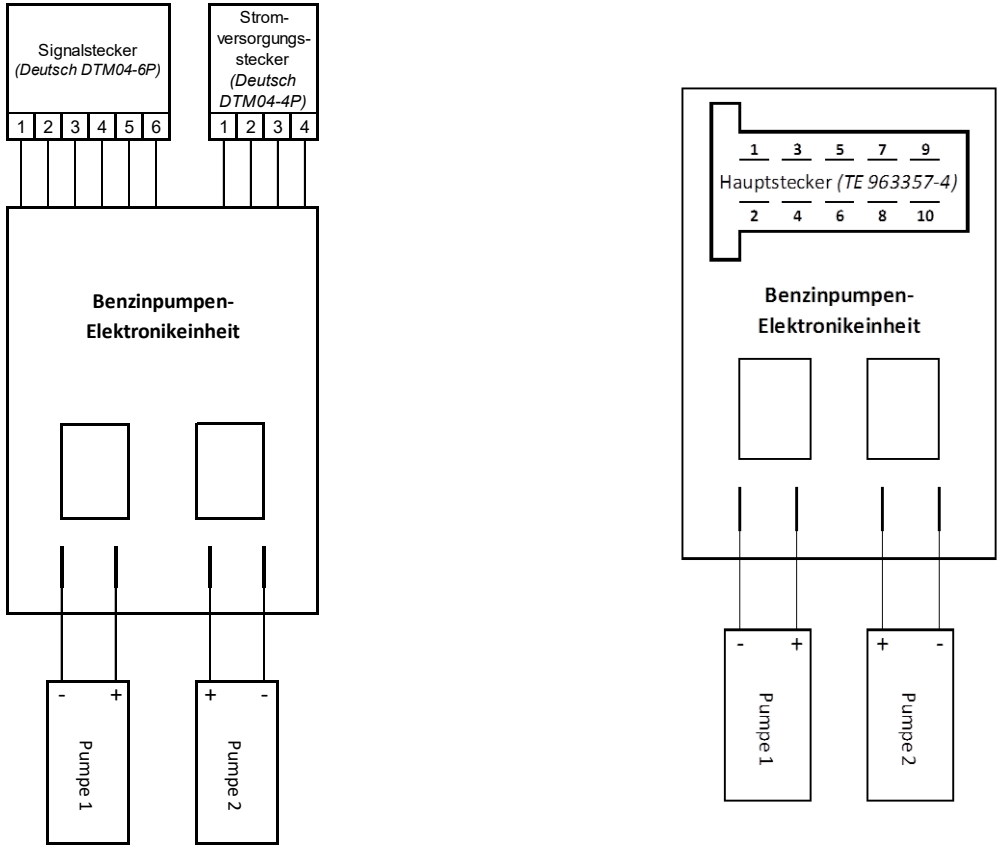

Fig 3: wire diagram fuel pump sensor unit

APPENDIX 2 - List of service bulletins / TM

LTA / AD	Year	SB / TM	Approval	Reason	2625 - Series								Since Engine No	Applic -able	Compi led with
					01				02						
						i	neo	sedo		i	neo	sedo			
	3.10.99	TM 4600-1	LBA	Limitation of the belt tension	X				X				2625–02 SN > 123 2625–02 SN > 19		
	06.02.04	TM 4600-2	EASA 2004/7537	Optional use of a slip cluth	X				X						
EASA AD 2007-0001R1-E	03.01.07	TM 4600-2-2	EASA E.C.01518	Check and modification of a slip clutch iaw. TM 4603-2	X				X						
	18.12.14	TM 4600–3	EASA 10034072	Engine with fuel injection system						X					
	12.12.12	TM 4600–4	EASA 10042881	Change of wiring, throttle valve assembly and redundancy system						X			2625–02 SN>353		
EASA AD 214-0269	12.12.14	TM 4600–5	EASA 10051491	Change of the engine redundancy system						X					
EASA AD 2016-0254	16.11.16	TM 4600–6	EASA 10060069	Change of the ignition mapping, change of connecting rod bearing						X			altered iaw. TM 4600 - 3		
	05.03.18	TM 4600–7		Introduction of injection system		X									
	23.02.18	TM 4600–8	EASA 10065221	Design Change 262502i						X			2625–02 SN > 406		
	26.06.19	TM 4600–9	EASA 100069272	Introduction of new throttle body		X		X		X					

LTA / AD	Year	SB / TM	Approval	Reason	2625 - Series								Since Engine No	Applic -able	Compi led with
					01				02						
						i	neo	sedo		i	neo	sedo			
AD2020-0056	19.08.19	TM 4600–10	EASA 10072150	Introduction of new ECU program							X				
EASA AD 2020-0056	19.08.19	TM 4600–11	EASA 10072764	Firmware update on ECU		X	X			X	X		2625–02 SN > 462		
		TM 4600–12	EASA 10072969	Introduction of replacement ECU Bee		X	X	X		X	X	X			
		TM 4600–13	EASA 10091250	New Throttle body sensor sensorless		X	X	X		X	X	X			
		TM 4600–14	EASA 10091250	Run-in procedure new engines	X	X	X	X	X	X	X	X			
		TM 4600–15	EASA 10091250	Modification of parameters for for engines 2 625 01i / 2 625 02i / 2 625 01i neo / 2 625 02i neo		X	X	X		X	X	X			
		TM 4600–16	EASA 10091250	Improvements to aircraft engines 2 625 01i / 2 625 02i / 2 625 01i neo / 2 625 02i neo		X	X	X		X	X	X			
		TM 4600–17	EASA 10091250	New inlet contour at the throttle body		X	X	X		X	X	X			
		TM 4600–18	EASA 10091250	Procedure for adaption of the mapping and injection timing for a specific aircraft type		X	X	X		X	X	X			
		TM 4600–19	EASA 10091250	Introduction of a balancing shaft system	X	X	X	X	X	X	X	X			

LTA / AD	Year	SB / TM	Approval	Reason	2625 - Series								Since Engine No	Applic -able	Compi led with
					01				02						
						i	neo	sedo		i	neo	sedo			
		TM4600–20	EASA 10091250	Usage of ATM Engine	X	X	X	X	X	X	X	X			

APPENDIX 3: RESERVED